PN 626195

Revision A February 2021

REACT™ M

Product Description Assembly Manual

TRINITY HIGHWAY

Ahead of the Curve®

REACT™ M

The REACT™ M has been tested pursuant to American Association of State Highway and Transportation Officials ("AASHTO") Manual for Assessing Safety Hardware ("MASH") specifications. The REACT™ M has been submitted for Federal-aid reimbursement eligibility on the National Highway System to the Federal Highway Administration ("FHWA").

Product Description
Assembly Manual

15601 Dallas Parkway
Suite 525
Addison, Texas 75001

Warning: The local highway authority, distributors, owners, contractors, lessors, and lessees are RESPONSIBLE for the assembly, maintenance, and repair of the REACT™ M. Failure to fulfill these RESPONSIBILITIES with respect to the assembly, maintenance, and repair of the REACT™ M could result in serious injury or death.

Important: These instructions are for standard assembly specified by the appropriate highway authority. In the event the specified system assembly, maintenance, or repair would require a deviation from standard assembly parameters, contact a Trinity Highway representative. The REACT™ M has been submitted for eligibility to the FHWA for use on the National Highway System under strict criteria utilized by that agency.

This manual must be available to the worker overseeing and/or assembling the product at all times. For additional copies, contact Trinity Highway directly at (888) 323-6374 or visit TrinityHighway.com.

The instructions contained in this manual supersede all previous information and manuals. All information, illustrations, and specifications in this manual are based on the latest REACT™ M information available to Trinity Highway at the time of printing. We reserve the right to make changes at any time. Please contact Trinity Highway to confirm that you are referring to the most current instructions.

Part No. 626195
© 2021 Trinity Highway Products, LLC

Table of Contents

Customer Service Contacts 3
Important Introductory Notes 3
Safety Symbols 4
Safety Rules for Assembly 4
Limitations and Warnings 5
System Overview 6
  System Components 7
  Vertical Wall Unidirectional Transition Components 10
  Vertical Wall Bidirectional Transition Components 10
  Safety Shape Bidirectional Transition Components 12
  Optional Components 13
Recommended Tools 14
Site Preparation/Foundation 16
Foundation/Anchoring 16
Trinity Highway Approved Adhesive Anchoring System 17
  Vertical Anchors 17
  Anchor Assembly Cautions 18
System Design 19
Transitions 19
Inspect Shipment 20
Assembly 20
  Attach Nose Cover 23
  Attach Side Reflectors 24
REACT™ M Final Inspection Checklist 25
Maintenance and Repair 26
  Cylinder Recycling Information 26
Component Replacement 27
Inspection Frequency 31
  Visual Drive-By Inspection 31
  Walk-Up Inspection Checklist 31
Post Impact 32
  Release Collapsed System 33
  System Reset 34
REACT™ M Inspection Log 35
Parts Ordering Procedure 36
Drawings 39
  REACT™ M RM62B036U 39
  REACT™ M w/Reflectors 627839 40
  REACT™ M RM62B036U-TVLR 41
  Vertical Wall Transition Plate, Unidirectional Only 627573 42
  REACT™ M RM62B036B-T8VLR 44
  Vertical Wall Transition Assembly 627843 45
  REACT™ M RM62B036B-T8SLR 47
  Safety Shape Transition Assembly 627577 48
  Anchor Plate, Safety Shape 627576 50
  Concrete Pad Against Rigid Barrier 627696 51
  Concrete Pad w/Below Grade Anchor Block 627696 52
  Nose Cover Assembly 617967 53
  Side Reflector Assembly 613705 54
  Pullout Bracket Assembly 627838 55

Customer Service Contacts

Trinity Highway is committed to the highest level of customer service. Feedback regarding the REACT™ M, its assembly procedures, supporting documentation, and performance is always welcome. Please contact Trinity Highway for additional information:

Trinity Highway

Telephone	(888) 323-6374 (USA) (214) 589-8140 (International)
Contact Link	TrinityHighway.com/Contact

Important Introductory Notes

Proper assembly of the REACT™ M is critical to achieve performance. The REACT™ M has been submitted for eligibility to the FHWA per AASHTO MASH criteria. These instructions should be read in their entirety and understood before assembling the REACT™ M. These instructions are to be used only in conjunction with the assembly of the REACT™ M and are for standard assemblies only as specified by the applicable highway authority. If you need additional information, or have questions about the REACT™ M, please contact the highway authority that has planned and specified this assembly and, if needed, contact Trinity Highway's Customer Service Department. This product must be assembled in the location specified by the appropriate highway authority. If there are deviations, alterations, or departures from the assembly protocol specified in this manual, the device may not perform as tested.

Important: **DO NOT** use any component part that has not been specifically specified herein for the REACT™ M during assembly or repair.

This product has been specified for use by the appropriate highway authority and has been provided to that user who has unique knowledge of how this system is to be assembled. No person should be permitted to assist in the assembly, maintenance, or repair of this system that does not possess the unique knowledge described herein. These instructions are intended for an individual qualified to both read and accurately interpret them as written. These instructions are intended only for an individual experienced and skilled in the assembly of highway products that are specified and selected by the highway authority.

A manufacturer's drawing package will be supplied by Trinity Highway upon request. Each system will be supplied with a specific drawing package unique to that system. Such drawings take precedence over information in this manual and shall be studied thoroughly by a qualified individual who is skilled in interpreting them before the start of any product assembly.

Safety Symbols

This section describes the safety symbols that appear in this REACT™ M manual. Read the manual for complete safety and assembly information.

Symbol	Meaning
	Safety Alert Symbol: Indicates Danger, Warning, Caution, or Important. Failure to read and follow the Danger, Warning, Caution, or Important indicators could result in serious injury or death to the workers and/or bystanders.
	Important: Read safety instructions thoroughly and follow the assembly directions and suggested safe practices before assembling, maintaining, or repairing the REACT™ M. It is the responsibility of the installer to follow the instructions contained in this manual. Failure to follow this warning can result in serious injury or death to workers and/or bystanders. Such failure also compromises the acceptance of this system by the FHWA.
	Important: Please keep up-to-date instructions for later use and reference by anyone involved in the assembly of the product.

Safety Rules for Assembly

*** Important Safety Instructions ***

This manual must be kept in a location where it is readily available to persons who are skilled and experienced in the assembly, maintenance, or repair of the REACT™ M. Additional copies of this manual are available from Trinity Highway by calling (888) 323-6374 or by email at TrinityHighway.com/Contact. This manual may also be downloaded directly from the website indicated below. Please contact Trinity Highway if you have any questions concerning the information in this manual or about the REACT™ M.

It is the responsibility of the installer to use appropriate safety precautions when operating power equipment, mixing chemicals, and when moving heavy equipment or the REACT™ M components. Gloves, eye protection, safety-toe shoes, and back protection shall be used.

Warning: It is the responsibility of the installer to use all safety measures incorporating appropriate traffic control devices specified by the highway authority. These measures must be used to protect all personnel while at the assembly, maintenance, or repair site.

Warning: Ensure that all of the REACT™ M Danger, Warning, Caution, and Important statements within the REACT™ M manual are completely followed. Failure to follow this warning could result in serious injury or death in the event of a collision.

Limitations and Warnings

Pursuant to MASH, Trinity Highway contracts with FHWA approved testing facilities to perform and evaluate crash tests to prepare a crash test results report. Trinity Highway is then able to submit a Request for Federal Aid Reimbursement of Safety Hardware Devices to the FHWA for review.

The REACT™ M has been submitted for eligibility to the FHWA to meet the requirements and guidelines of MASH. These tests evaluate product performance defined by AASHTO involving lightweight cars (approx. 2420 lb. [1100 kg]) and full size pickup trucks (approx. 5000 lb. [2270 kg]). The REACT™ M is certified to the test level indicated below:

Test Level 3: 62 mph [100 km/h]

These AASHTO directed tests are not intended to represent the performance of systems when impacted by every vehicle type or every impact condition existing on the roadway. This system is tested only to the test matrix criteria of MASH as approved by FHWA.

Trinity Highway expressly disclaims any warranty or liability for injury or damage to persons or property resulting from any impact, collision or harmful contact with products, other vehicles, or nearby hazards or objects by any vehicle, object or person, whether or not the products were assembled in consultation with Trinity Highway or by third parties.

The REACT™ M is intended to be assembled, delineated, and maintained within specific state and federal guidelines. It is important for the highway authority specifying the use of a highway product to select the most appropriate product configuration for site specifications. The customer should be careful to properly select, assemble, and maintain the product. Careful evaluation of site layout, traffic speed/type, direction, and visibility are some of the elements that require evaluation by the highway authority in the selection of a highway product. For example, curbs could cause an untested effect on an impacting vehicle.

After an impact occurs, the debris from the impact should be removed from the area immediately and the specified highway product should be evaluated and restored to its original specified condition or replaced as the highway authority determines as soon as possible.

Warning: Do not assemble, maintain, or repair the REACT™ M until you have read this manual thoroughly and completely understand it. Ensure that all Danger, Warning, Caution, and Important statements within the manual are completely followed. Please call Trinity Highway at (888) 323-6374 if you do not understand these instructions.

Warning: DO NOT modify the REACT™ M in any way.

Warning: It is the sole responsibility of the project engineer and/or local highway authority and its engineer to ensure that the REACT™ M and delineation used meet all federal, state, specifying agency, and local specifications.

Warning: It is the sole responsibility of the project engineer and/or local highway authority and its engineer to ensure that your assembly meets all appropriate Manual on Uniform Traffic Control Devices (“MUTCD”) and local standards.

System Overview

Crash testing results have shown that the REACT M is a potentially reusable, re-directive, non-gating crash cushion for roadside obstacles up to 30” [762 mm] wide when impacted within MASH 16 TL-3 crash test standards. After those impacts observed within MASH criteria, it has been observed that the bulk of the system can be potentially reused.

When impacted under MASH criteria, this system is capable of shielding specified roadside obstacles up to 30” [762 mm] wide. It consists of a series of “smart plastic” Cylinders attached to a steel Base Track. The term “smart plastic” refers to the memory characteristics of the Cylinders. After a head-on impact as described in MASH 16 TL-3, the REACT™ M has the potential to regain a major portion of its shape, position, and energy absorbing capability.

The REACT™ M utilizes various Cylinder wall thicknesses that have been shown to help withstand impacts by light cars or heavier, high-center-of-gravity vehicles.

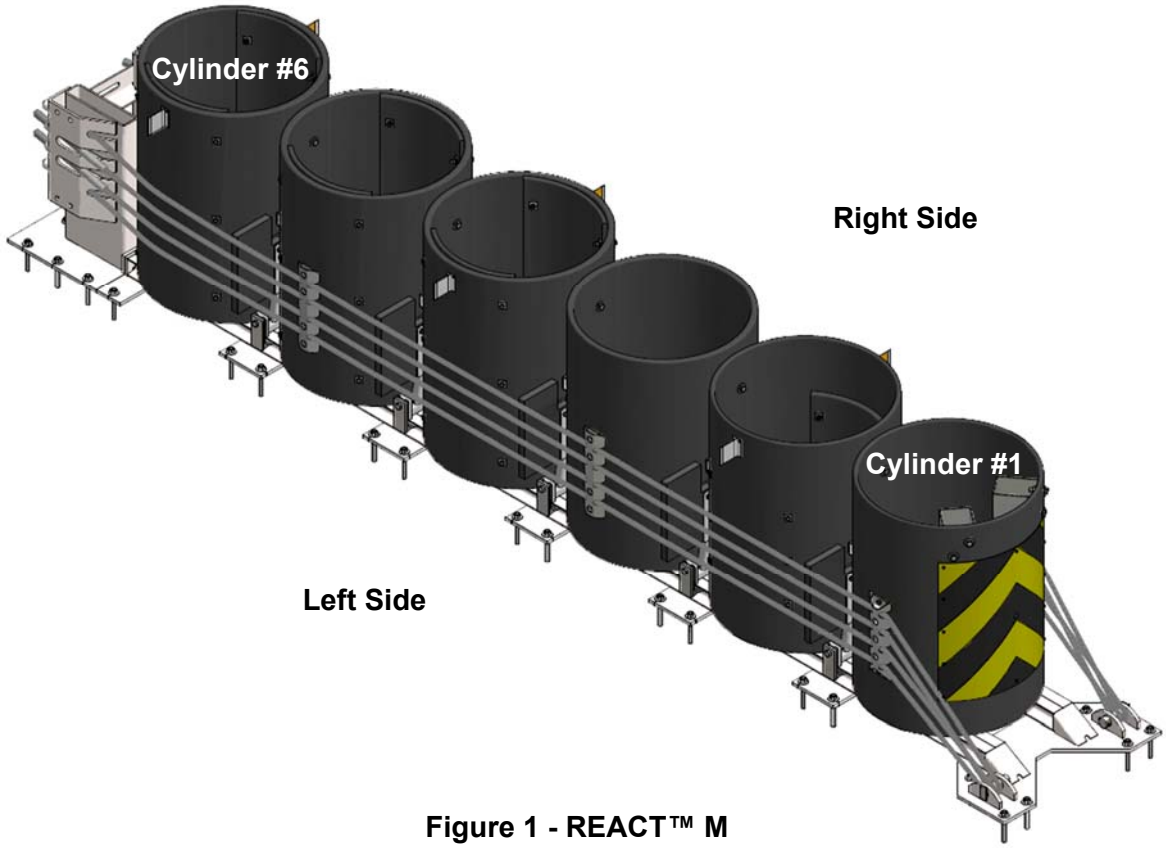

Figure 1 - REACT™ M

System Dimensions

Effective Length	**18'-10" [5.74 m]**
System Length (Overall)	**22'-2 3/4" [6.78 m]**
Effective Width (Cylinder Diameter)	**3'-0" [0.91 m]**
Cylinder Width (w/Cable Guides)	**3’-2 3/4” [0.98 m]**
System Width (Overall at Base Track)	**3'-5 3/4" [1.06 m]**
Height (Overall)	**4'-4 3/4" [1.34 m]**

System Components

Below is a list of system components that may be used in your particular REACT™ M configuration. Verify parts delivered and system details with the BOM (Bill of Materials) and system drawings shipped with your system. Please call Trinity Highway if you have any system questions (p. 3).

Note: Components are not shown to scale.

Backup and Base Track Assembly, REACT M
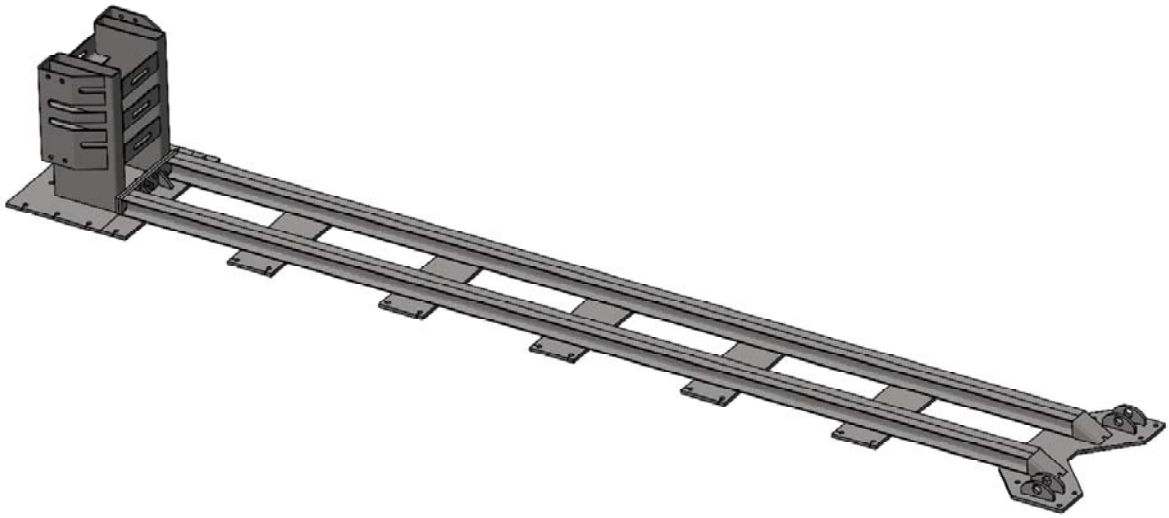
627671

Cylinder Assembly 6	Cylinder Assembly 5	Cylinder Assembly 4
	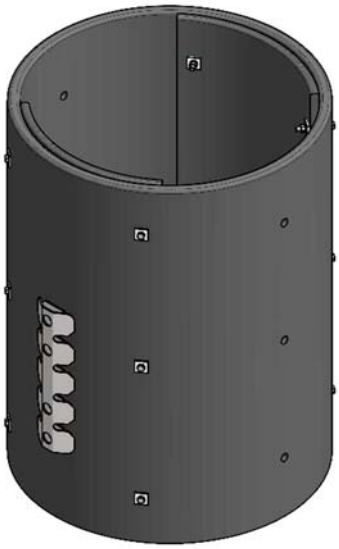	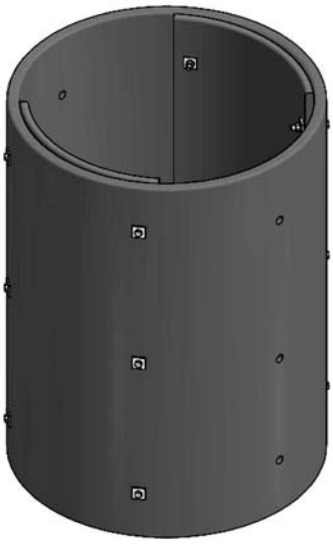
627652	627673	627649

Cylinder Assembly 3	Cylinder Assembly 2	Cylinder Assembly 1
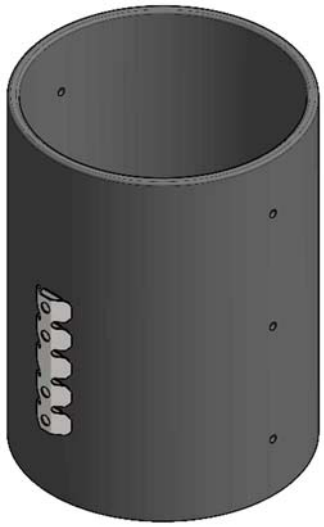		
627646	627636	627644

Diaphragm, REACT M	HDPE 1 1/2x12 3/16x18	Rail Guide, Inner
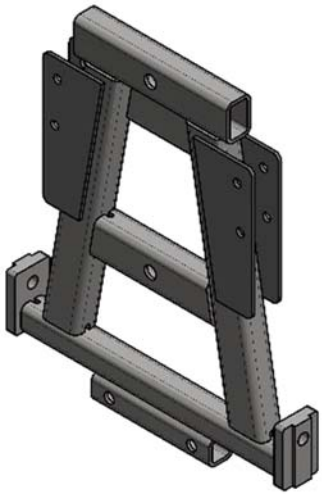	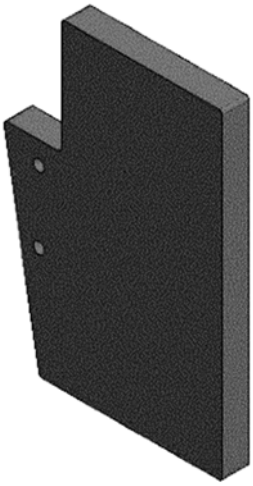	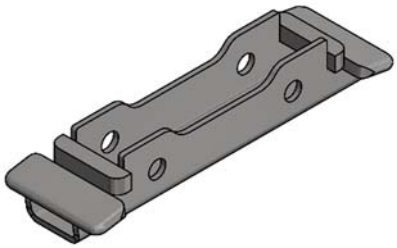
627621	627612	627630

Rail Guide, Outer	Cylinder Spacer	Bolt, Hex, 1/2x3, G5, All Thread
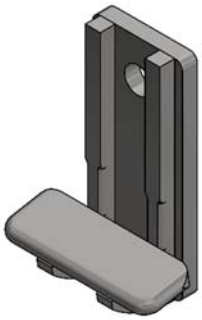	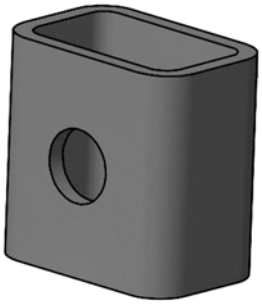	
627626	627631	113479

Nut, Hex, 1/2, G5	Bolt, Hex, 3/4x2 1/2, G8	Bolt, Hex, 3/4x4,G5, All Thread
	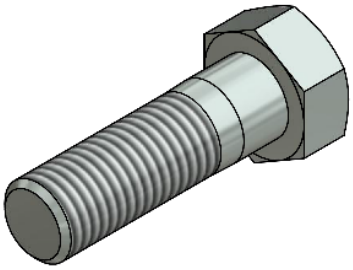	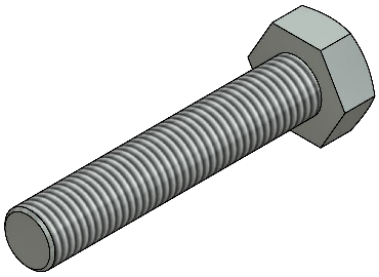
115940	113551	113568

Nut, Hex, 3/4, Heavy, A563 DH	Bolt, Hex, 3/4x6, G5	Washer, Flat, 3/4x2, Heavy
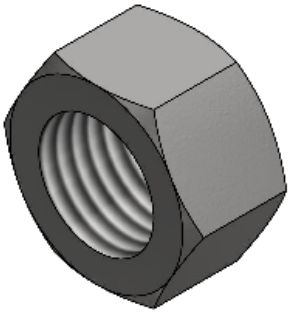	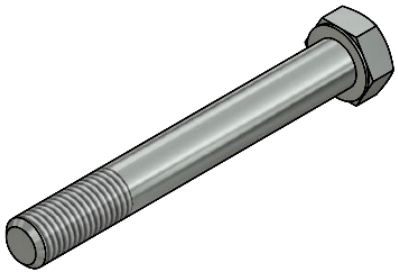	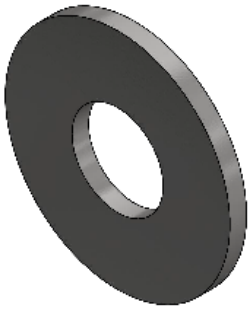
003704	113577	118027

Bolt, Hex, 3/4x4, A325	Washer, Sqr, 1/4x2 1/2x2 1/2	Washer, Bar, 1/4x2 1/2x20
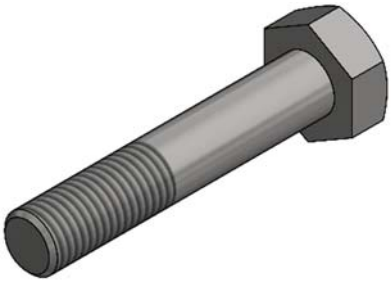	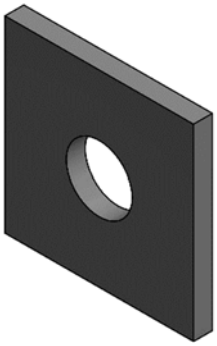	
004708	627623	627622

Cable Assembly, REACT M	Pin, Restraining Cable	Bolt, Hex,1/4x2 1/2, G2
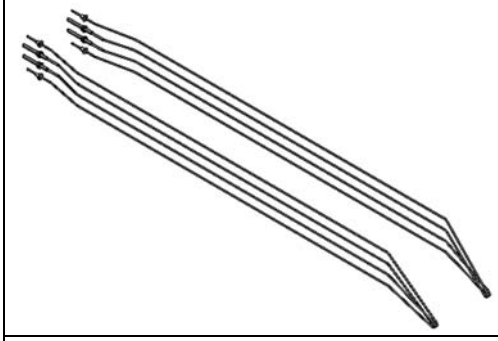		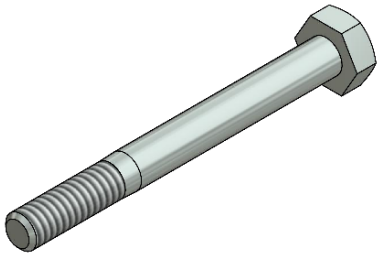
627633	612040	113512

Washer, Lock, 1/4	Nut, Hex, 1/4	Anchor Kit, Hilti, 3/4x7,(4)
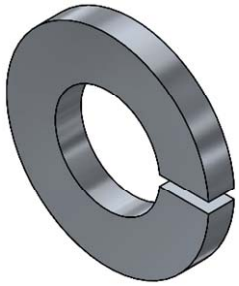	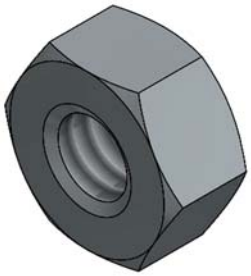	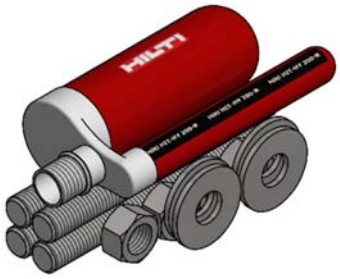
118085	115946	619316

Vertical Wall Unidirectional Transition Components

Adapter, Transition, Vert, Uni	Bolt, Hex, 3/4x2 1/2, G8	Nut, Hex, 3/4, Heavy, A563 DH
	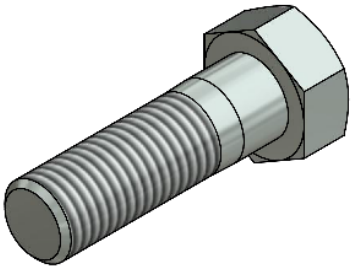	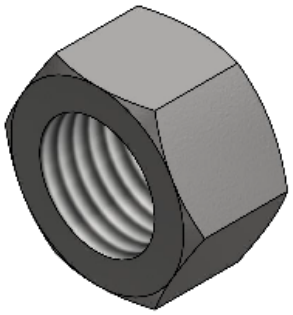
627570	113551	003704

Anchor Kit, Hilti, 3/4x7,(4)
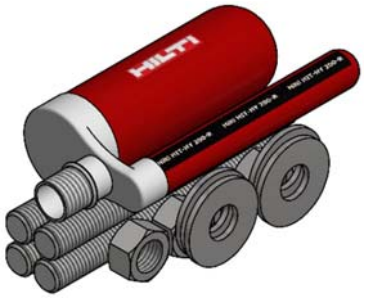
619316

Vertical Wall Bidirectional Transition Components

Adapter, Transition, REACT M	T10/End Shoe, Thrie	Rail, Transition, Thrie, Stiff
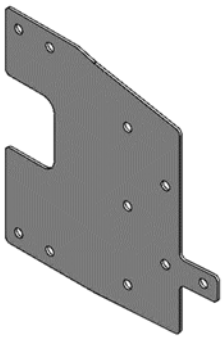	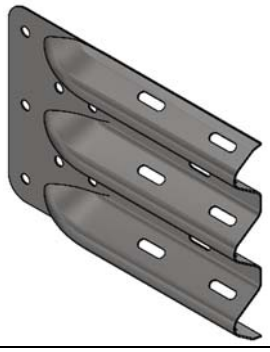	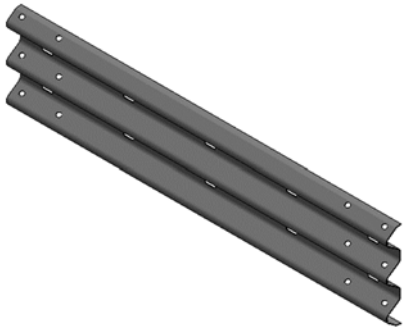
627700	000975	627794

Support, Transition, REACT M	Wood Block, 6x8.5x13 Tapered	Bolt, Hex, 3/4x2 1/2, G8
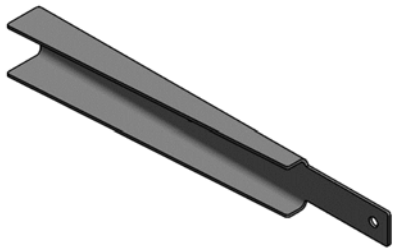		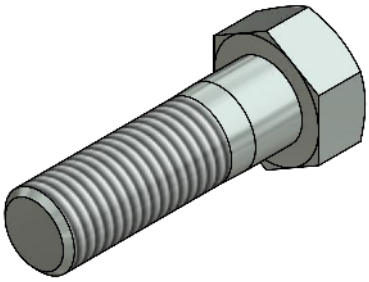
627793	006135	113551

Bolt, Hex, 3/4x1 1/2, G5	Washer, Flat, 3/4x2, Heavy	Nut, Hex, 3/4, Heavy, A563 DH
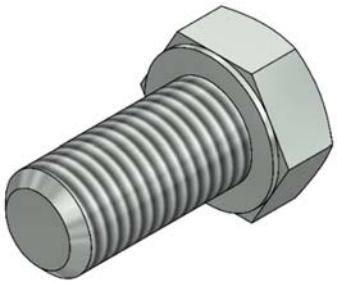	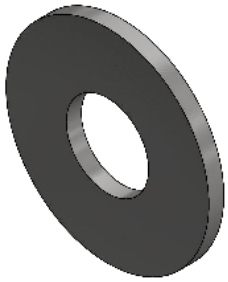	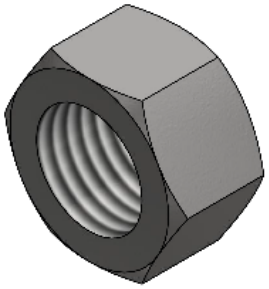
113547	118027	003704

Bolt, Rail, 5/8x1 1/4	Bolt, Lag, 5/8x3, A307	Washer, Guardrail
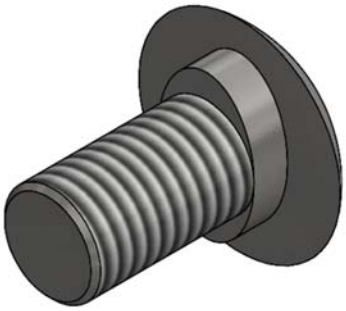	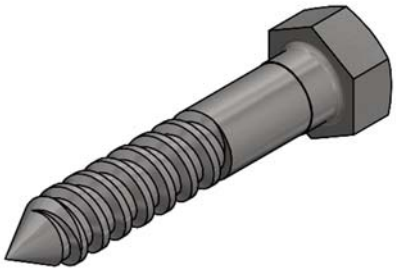	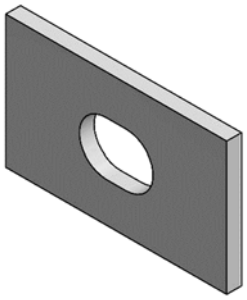
003360	004412	003320

Washer, Flat, 5/8x1 3/4	Nut, Hex, 5/8, Rail	Anchor Kit, Hilti, 3/4x7,(4)
		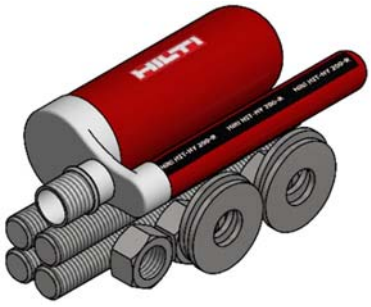
003300	003340	619316

Safety Shape Bidirectional Transition Components

Adapter, Transition, W-Beam 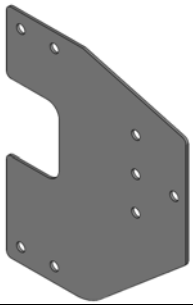	Bolt, Hex, 3/4x2 1/2, G8 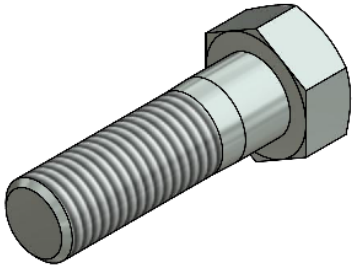	Nut, Hex, 3/4, Heavy, A563 DH 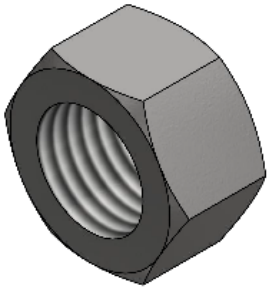
627567	113551	003704

10/End Shoe, W-Beam	Bolt, Hex, 3/4x1 1/2, G5 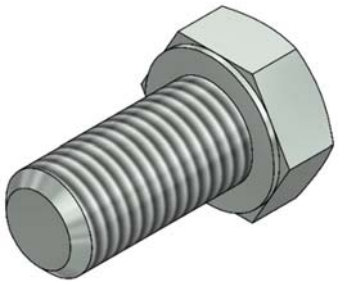	Washer, Flat, 3/4x2, Heavy 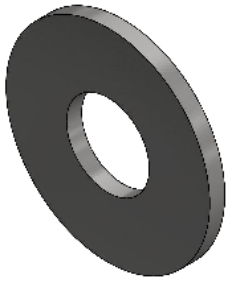
000926	113547	118027

Rail, Transition, W-Beam, Stiff	Bolt, Rail, 5/8x1 1/4 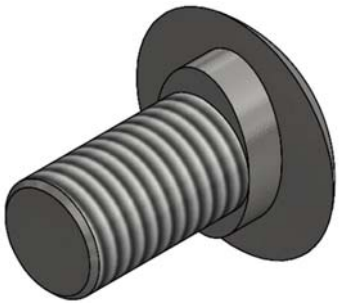	Nut, Hex, 5/8, Rail 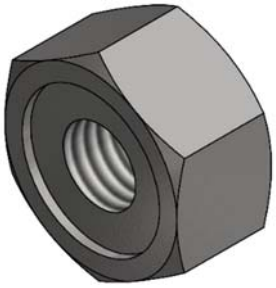
627568	003360	003340

Washer, Guardrail 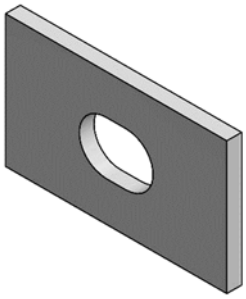	Support, Transition, REACT M 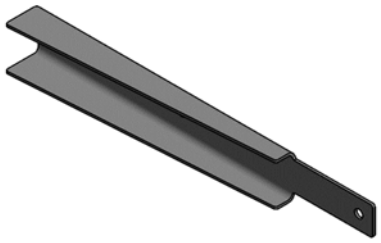	Wood Block, 6x8.5x13 Tapered
003320	627793	006135

Bolt, Lag, 5/8x3, A307	Washer, Flat, 5/8x1 3/4	Anchor Kit, Hilti, 3/4x7,(4)
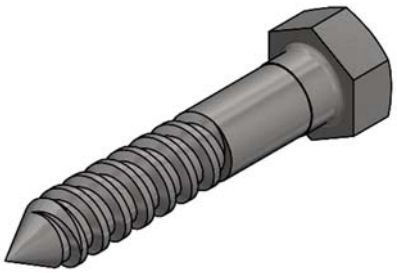		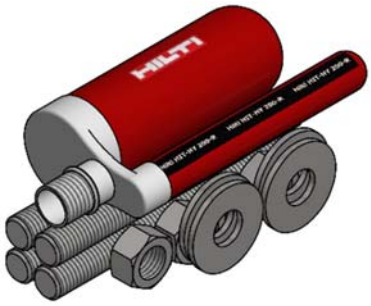
004412	003300	619316

Optional Components

Nose Cover Assy, Gore	Nose Cover Assy, Universal
617967	617968

Reflector Assy, White/Amber, (6)	Pullout Assy, REACT	Brush, Hilti, 7/8
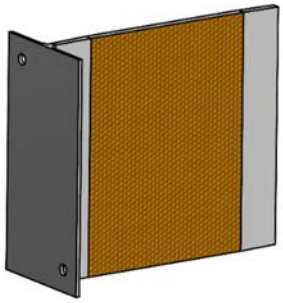	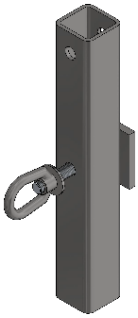	
613706	612816	113797

Anchor Plate, New Jersey Shape	Anchor Plate, F-Shape
626537	626856

Recommended Tools

Documentation

- Instructional Manual
- Drawing Package

Personal protective equipment

- Eye Protection
- Gloves
- Safety-Toe Shoes
- Protective Clothing
- Reflective Vest

Cutting equipment

- Grinder, Hacksaw or Torch
- Rotary Hammer Drill
- 7/8” Rebar Cutting Bit
- 7/8” Concrete Drill Bit (Hollow Drill Bit with vacuum feature recommended)

Important: Trinity Highway recommends using **double-fluted** drill bits to achieve optimum tensile strength when applying an approved adhesive anchoring system (p. 17).

Hammers

- Sledgehammer

Wrenches

- Heavy duty impact wrench
- 7/16”, 3/4” Sockets
- 3/4”, 7/8”, 15/16”, 1 1/8”, 1 1/4” Deep Hex-head Sockets
- Ratchet and extensions for above sockets
- Standard adjustable wrench
- 7/16”, 1 1/8”, 1 1/4”, combination wrenches
- Large Pipe Wrench
- Large Adjustable Wrench (2 1/4” minimum opening)
- Torque Wrench (150 ft-lbf minimum)

Screwdrivers

- Screw gun or standard drill with adapter chuck for small screws/bolts
- Phillips Screwdriver

Miscellaneous

- Traffic control equipment
- Lifting and moving equipment (A lifting device is preferred although a forklift can be used.) Minimum 6,000 lb. [2722 kg] capacity required. Do not lift overhead.
- Air compressor (100 psi minimum)
- Generator (5 kW minimum)
- Vacuum for borehole concrete dust removal
- Long pry bar
- Drift pin
- Tape measure 25’ (7.5 m)
- Chalk line
- Rags, water, and solvent for touch-up

Important: The above list of tools is a general recommendation and should not be considered an extensive list. Depending on specific site conditions and the complexity of the assembly specified by the appropriate highway authority, the required tools may vary. Decisions as to what tools are needed to perform the job are entirely the responsibility of the specifying highway authority and the authority’s selected contractor performing the assembly of the system at the authority’s specified assembly site.

Site Preparation/Foundation

The REACT™ M must be assembled on an existing or freshly placed and cured concrete foundation (4000 psi [28 MPa] minimum). Location and orientation of the concrete foundation and attenuator must comply with project plans or as otherwise determined by the local highway authority.

Recommended dimension and reinforcement specifications for new concrete foundations are in the site specific Drawing Package provided with each REACT™ M or the standard drawings in the back of this manual. The system may be assembled on a reinforced or non-reinforced concrete roadway (minimum 8" [200 mm] thick). Deployment cross-slope shall not exceed 8% and should not twist more than 2% over the length of the system (Figure 2); the foundation surface shall have a light broom finish.

Warning: It is the responsibility of the project engineer and/or local highway authority and its engineer to ensure proper site grading for the REACT™ M as dictated by the state or specifying agency pursuant to the AASHTO Roadside Design Guide.

Warning: It is the responsibility of the installer to ensure accurate placement of all steel rebar to avoid interference with the concrete anchor studs.

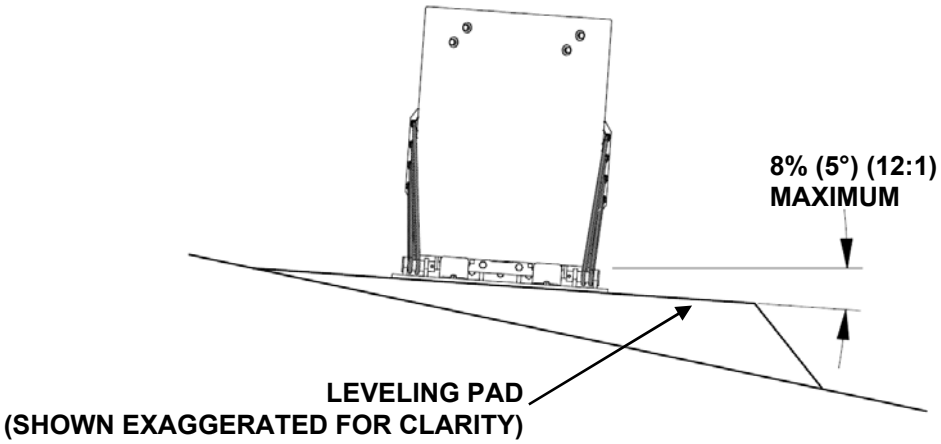

Figure 2
Cross-Slope

Foundation/Anchoring

Warning: It is the responsibility of the installer to ensure the foundation conforms to the AASHTO Roadside Design Guide.

Reinforced or non-reinforced Concrete Pad or Roadway

Foundation: 8" [200 mm] minimum depth Portland Cement Concrete

Anchorage: Approved adhesive with 7" [180 mm] studs (5 1/2" [140 mm] embedment)

Trinity Highway Approved Adhesive Anchoring System

A Trinity Highway approved adhesive anchoring system is required to securely anchor crash cushions. Each approved adhesive kit contains adhesive, studs, nuts and washers. Both vertical and horizontal assemblies are possible using an approved adhesive anchoring system.

Important: Follow adhesive manufacturer's requirements for storage, handling, working time, cure time, and torque specifications.

Vertical Anchors

Note: Read all Trinity Highway approved adhesive instructions before starting.

1) Prepare the Concrete Foundation

Warning: Do not allow anchoring adhesive to contact skin or eyes. Review the safety data sheet supplied with adhesive kit for first-aid procedures. Use only in well-ventilated area(s). Do not use near open flame.

Warning: It is the responsibility of the installer to maintain a safe work area including the use of standard work zone safety equipment & PPE: gloves, safety-toe shoes, and eye / ear protection.

The anchors (studs) that anchor the REACT™ M Backup and Base Track to the concrete foundation must be those shipped in the kit. These studs must be set in minimum 4000 psi [28 MPa] concrete. Allow the concrete to cure a minimum of seven days before applying anchoring adhesive.

2) Drill Boreholes

Caution: It is the responsibility of the installer to consult OSHA silica respiratory standard 29 CFR 1910.134 for debris removal from borehole(s) and use Trinity Highway approved adhesive to achieve optimum tensile strength. Do not use diamond drill bits for drilling boreholes.

Use the part that is to be anchored as a drilling template. Use a rotary hammer drill to drill the boreholes 7/8" [22 mm] diameter to the recommended depth. See the approved adhesive instructions provided with your kit. Check to ensure each borehole is drilled to the proper depth and aligned with the part to be anchored per the Anchoring Information below.

Anchoring Information			
Stud Size:	**Concrete Bit Size**	**Minimum Depth**	**Recommended Torque**
3/4"x 7"	**7/8" [22 mm]**	**5 1/2" [140 mm]**	**Consult Adhesive Kit Spec.**

3) Clean the Boreholes

Blow the concrete dust from the borehole using oil-free compressed air. Thoroughly brush it with a 7/8" [22 mm] diameter steel bristle tube brush and then blow it out again. If the borehole is wet, completely flush it with water while brushing and then blow it clean to remove all water using oil-free compressed air. Alternatively, a hollow concrete drill bit with an approved vacuum system may be used to prepare and clean the boreholes for anchors instead of the blow, brush, blow process.

4) Apply Approved Adhesive

Fill the borehole 100% full.

Important: Fill the borehole from bottom up to prevent air pockets.

Caution: Fill borehole 100% full so it is even with the pavement surface per adhesive manufacturer's instructions.

5) Add Nuts and Washers to Anchor Studs

Place a flat washer onto the stud then thread a nut on until the end of the stud is flush with the nut (Figure 3).

6) Insert Studs in Boreholes and Wait for Adhesive to Cure

Push the stud down through the part to be anchored and into the borehole.

Caution: Do not disturb or load the stud until the approved adhesive material has fully cured (reference instructions supplied with the approved adhesive kit).

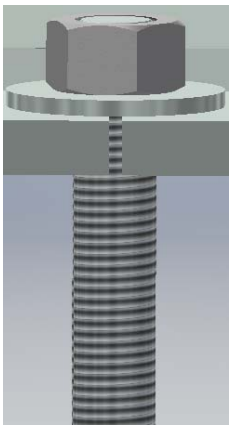

Figure 3
Anchor Application
(Before Applied Torque)

7) Torque the Nuts

Once the adhesive has fully cured, torque the nut to the adhesive manufacturer's recommended values.

Anchor Assembly Cautions

1) Steel rebar

If steel rebar is encountered while drilling an anchor borehole, apply one of the following solutions:

A) Use a rebar drill bit for the **rebar only** and then switch back to the concrete bit to finish drilling into the underlying concrete until the proper borehole depth is reached.

Caution: Do not drill through rebar without first obtaining permission to do so from the project engineer.

B) Drill a new borehole down at an angle past the rebar to the proper depth. Anchor the stud by completely filling both boreholes with an approved adhesive.

System Design

The REACT™ M is intended to minimize assembly time and arrives at the site fully assembled. The assembly crew needs only to lift and place the system in front of the barrier or roadside obstacle, drill boreholes, set anchors, and attach Transition(s) where applicable.

Transitions

The REACT™ M can be used in unidirectional and bidirectional applications. Transition panels must be added to any side exposed to traffic if there is potential of vehicle interaction on the impacting face or end of roadside obstacle.

The proper transition panel(s) to use will depend on the direction of traffic and what type of barrier or roadside obstacle the REACT™ M is shielding. Contact the Customer Service Department prior to deployment if you have any questions (p. 3). Refer to the Drawing Package provided with each REACT™ M for installation details.

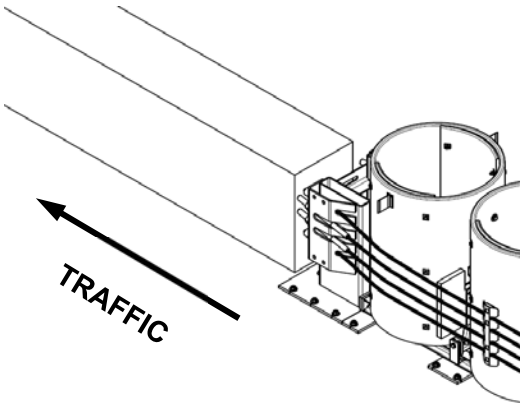

Figure 4
No Transition, 4” Offset (min.)
Unidirectional Only

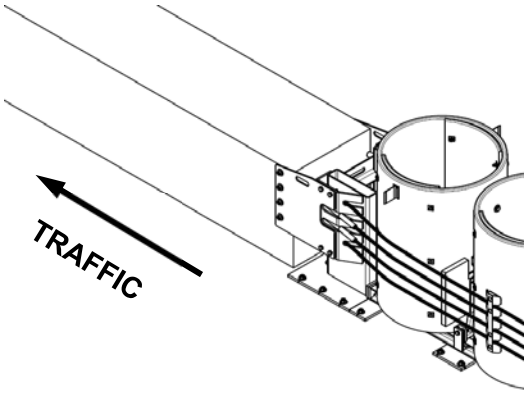

Figure 5
Vertical Wall, 0” Offset
Unidirectional Only

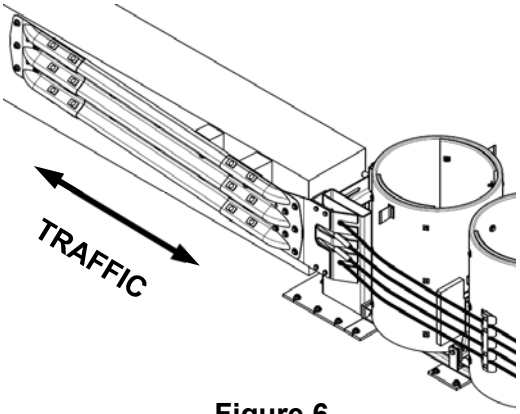

Figure 6
Vertical Wall 8” Offset

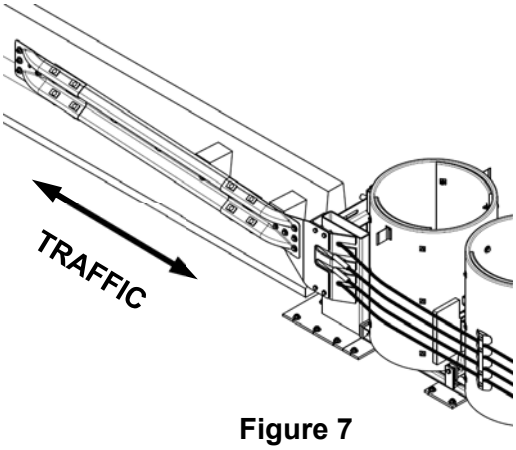

Figure 7
Safety Shape 8” Offset

Warning: The system Backup must not become a roadside obstacle to reverse direction traffic. A system placed with traffic approaching from the rear may require transition hardware.

Inspect Shipment

Before installing the REACT™ M at a specified location, check the received parts against the shipping list supplied with the system. Make sure all parts have been received. The system is shipped assembled. The Pullout Assembly should be stored for post impact use (pp. 32-34).

Assembly

Note: The Drawing Package provided with the REACT™ M must be used with these instructions for proper installation and should take precedence over these general instructions.

Deploy Traffic Control

1) A traffic control plan appropriate to the complexity of the project should be prepared and understood by all parties before the REACT™ M is installed. Follow the plan set forth by the highway authority specifying the use of this system.

Deploy the appropriate work zone safety devices prior to installation and during all phases of deployment.

Warning: The correct safety equipment and traffic management system approved by the requisite highway authority must be used as required for any installation of the REACT™ M.

2) Base Point & Centerline

Typically the base point of the REACT™ M will be the midpoint of the roadside obstacle at its front face. This may change depending on obstacle width or if bidirectional traffic is present (refer to the provided Drawing Package for details).

Extend a chalk line from the base point, perpendicular to the roadside obstacle face, or as determined by project engineer, to a distance greater than the maximum length of the REACT™ M (refer to the provided Drawing Package for details). This chalk line will become the centerline for the REACT™ M (Figure 8).

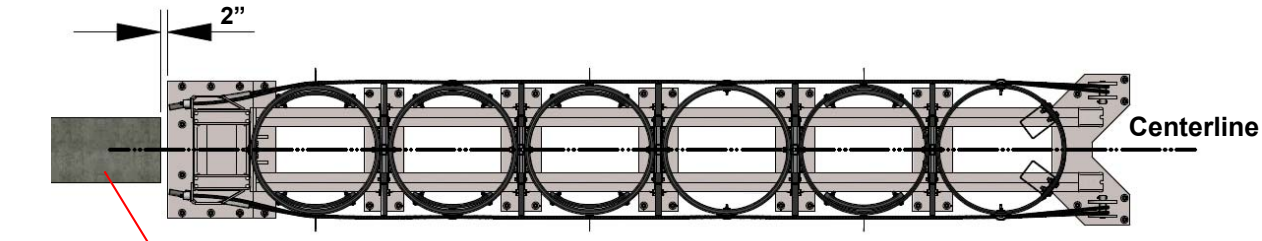

Figure 8 – System Placement

2) Lifting/Placing the System

Use fixed-length slings with a 6,000 lb. [2722 kg] minimum capacity. Fixed slings will prevent the REACT™ M from tipping. Do not lift overhead. Measure from the centerline to ensure that the REACT™ M is centered and positioned at the proper angle. The steel Backup Base Plate should be 2” [50 mm] forward of the roadside obstacle face (Figure 8).

Warning: Ensure the hoist device is properly rated to lift the REACT™ M.

4) Drill and Set Anchors

Use the holes in the Backup and Base Track as a template to locate and drill boreholes, 7/8” [22 mm] diameter x 5 1/2” [140 mm] deep into the foundation (Figure 9). All anchor holes in the Backup and Base Track must be used to anchor the REACT™ M to the foundation. Use the approved adhesive kit supplied with the REACT™ M to secure the system to the foundation (pp. 17-18).

Warning: Every anchor hole in the Backup and Base Track must be used to secure the REACT™ M to the foundation.

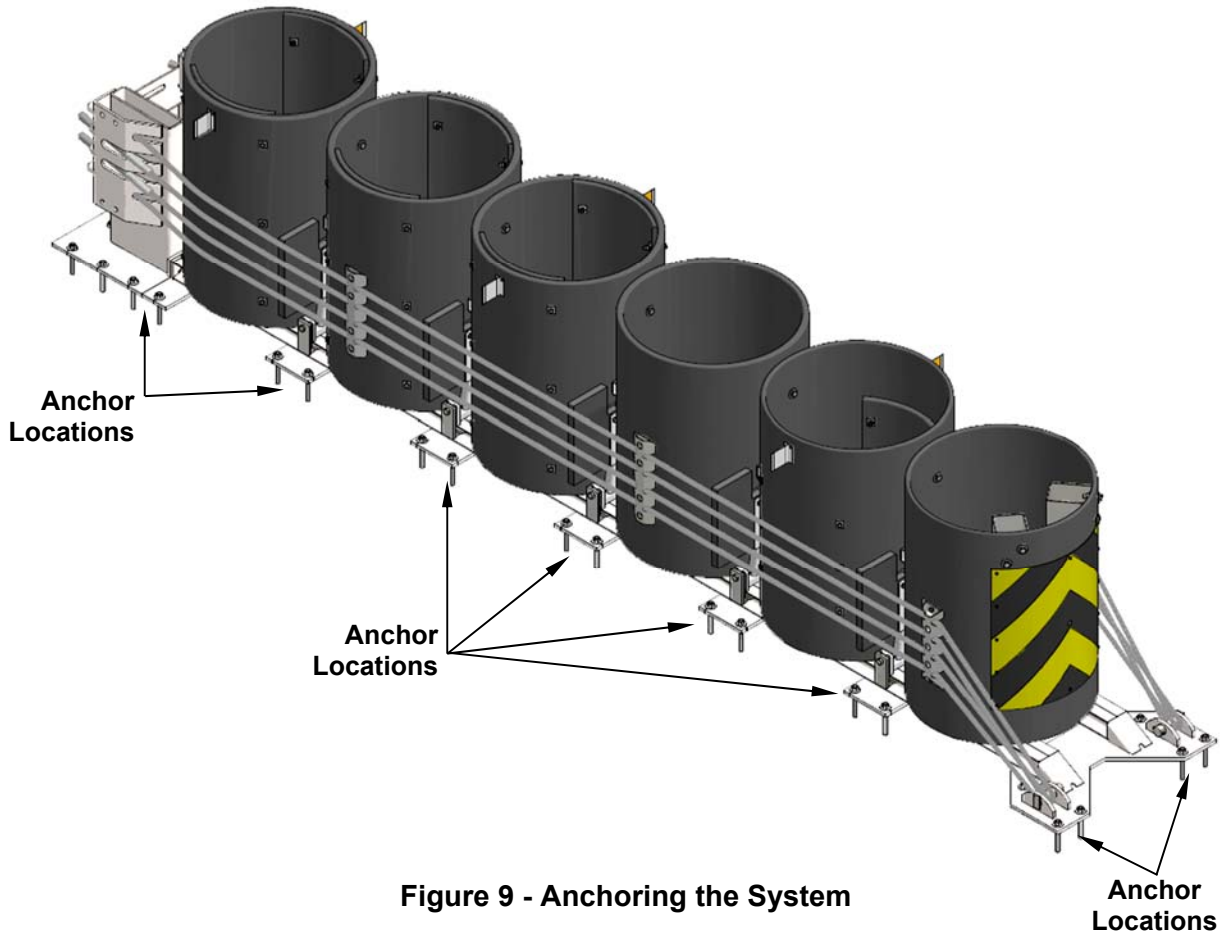

Figure 9 - Anchoring the System

5) Tension Restraining Cables

Warning: Do not tension cables until the approved adhesive material has fully cured (pp. 17-18).

Use the nuts on the threaded end of the cables to tension the cables. Use a large pipe wrench to prevent the threaded end of the cable from spinning while tightening the nut (Figure 10).

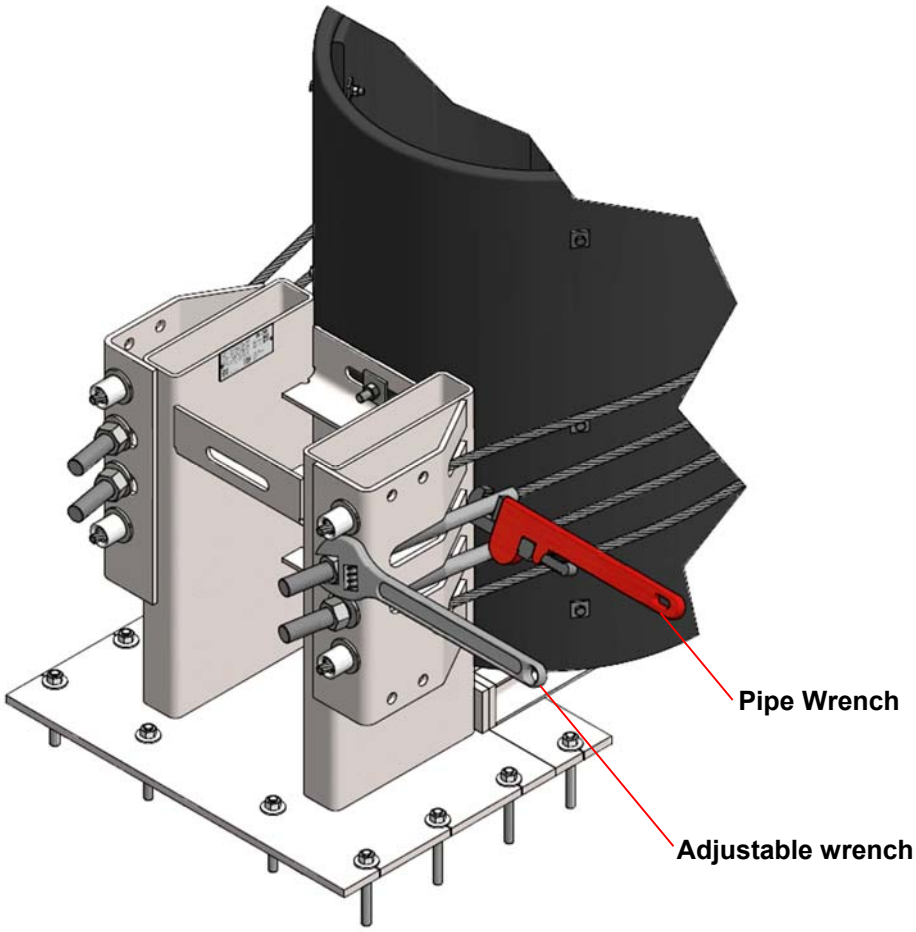

Figure 10 – Tightening the Cables

When properly tensioned, the cables should not deflect more than 2” [50 mm] with approximately 100 lb. [45 kg] downward force applied midway between cable guides.

6) Install Transition

Where applicable, install specified transition(s) indicated by the Drawing Package provided with the REACT™ M. You may also refer to the drawings in the back of this manual.

Attach Nose Cover

1. Ensure an appropriate Nose Cover is attached (Figure 11). Refer to local standards and MUTCD nose cover requirements.

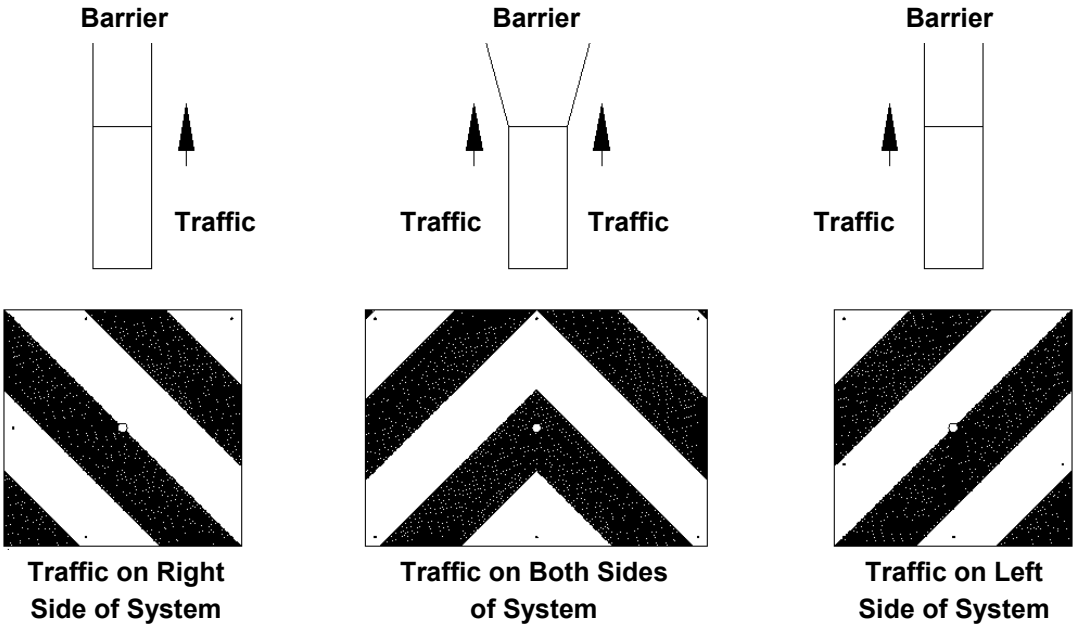

Figure 11 - Nose Cover Selection

2. Align 1” diameter hole in Nose Cover with 1” diameter hole in Front Cylinder (Figure 12).
3. Screw 1/4" self-drilling screws through the Nose Cover into the Front Cylinder until the head of each fastener is flush (twelve (12) places) (Detail A).

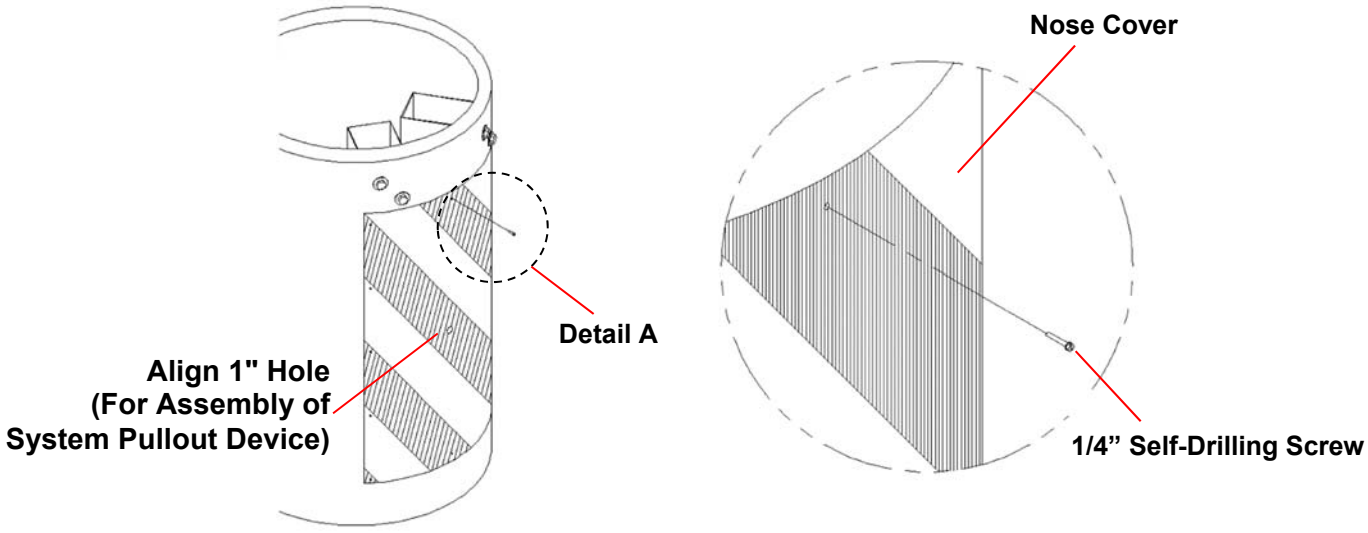

Figure 12

Detail A

Attach Side Reflectors

Refer to local standards and MUTCD for reflector requirements.

Typically, side reflectors are attached to Cylinders #2, #4, and #6.

Attach Side Reflectors to traffic side(s) of the system, with the white side facing traffic, by screwing #8 self-drilling screws through the reflector and into the Cylinder until head of fastener is flush (2 per reflector) (Figure 13).

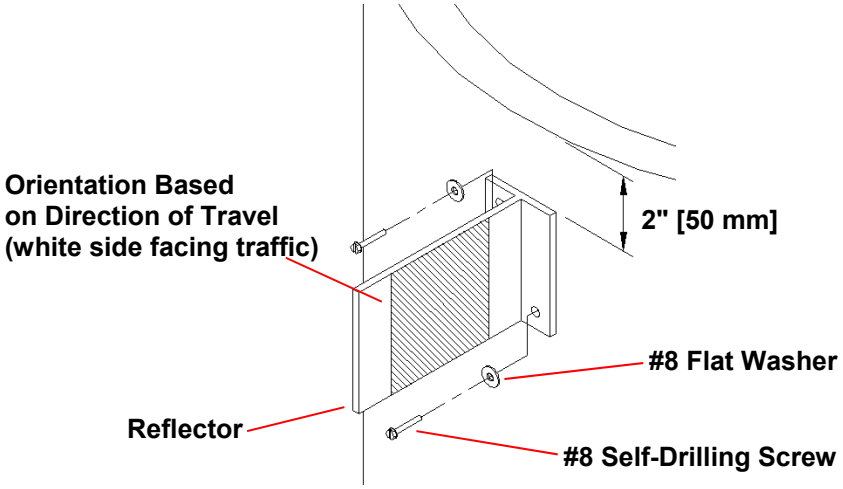

Figure 13 – Side Reflector

REACT™ M Final Inspection Checklist

Site Location: _____

Date: _____

Inspector: _____

- ☐ Transitions, if required, are in place and properly fitted (p. 19)
- ☐ Every anchor hole on the Backup and Base Track is fastened to the foundation by an anchor (p. 21)
- ☐ Each anchor is torqued to adhesive manufacturer specification (pp. 17-18)
- ☐ All cables are attached and properly tensioned (p. 22)
- ☐ All fasteners are properly tightened
- ☐ Each Cylinder is properly positioned on Base Track
- ☐ Appropriate Nose Cover is attached (p. 23)
- ☐ Side reflectors, if required, are attached (p. 24)
- ☐ Remove all construction debris in and around the system

Important: After an impact, follow the “Post Impact Checklist” on page 32.

Maintenance and Repair

The REACT™ M, through crash testing, has been shown to be a potentially reusable crash cushion. After impacts within MASH 16 TL-3 criteria, it has been observed that, potentially, the bulk of the system can be reused. However, whether or not a system is reusable is the responsibility of the highway authority specifying their use.

The REACT™ M must be inspected after each impact (p. 32). Depending on the impact, components may get damaged and need replacement. It is critical that all cables and anchoring be checked and returned to original assembly conditions.

Warning: Use only Trinity Highway parts that are specified herein for the REACT™ M for assembling, maintaining, or repairing the REACT™ M. **Do not utilize or otherwise comingle parts from other systems even if those systems are other Trinity Highway systems**. Assembly, maintenance, or repairs using unspecified parts or accessories is strictly prohibited.

Important: Trinity Highway makes no recommendation whether use or reuse of any part of the system is appropriate or acceptable following an impact. It is the sole responsibility of the project engineer and/or the local highway authority and its engineers to make that determination. It is critical that you inspect this product after assembly is complete to make certain that the instructions provided in this manual have been strictly followed.

Cylinder Recycling Information

The Cylinders are made of HDPE plastic and are recyclable.

Component Replacement

The following assemblies illustrate system replacement components. Refer to the comprehensive parts list for additional information (pp. 36-38).

Diaphragm Assembly

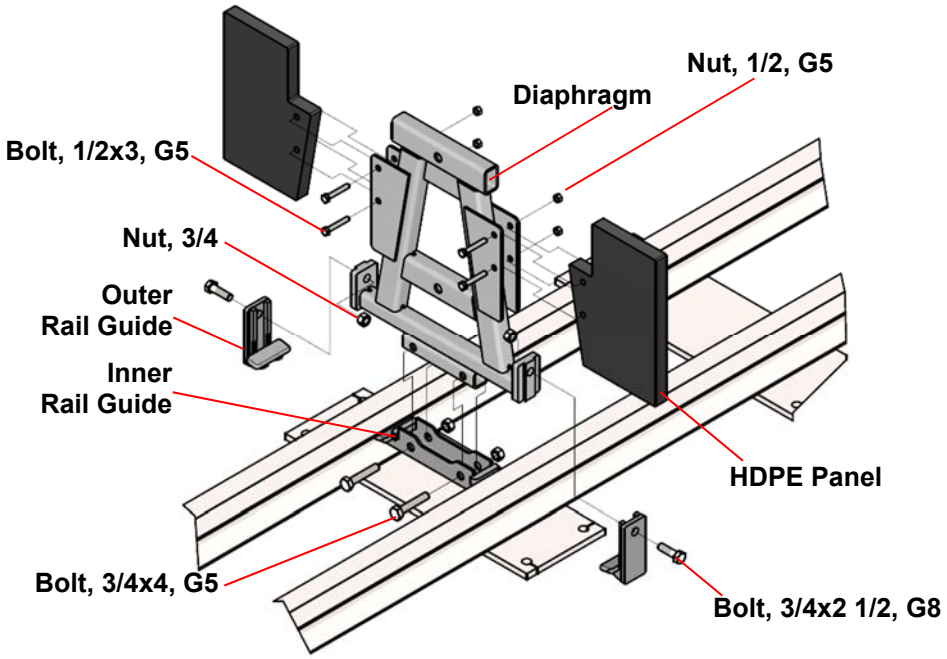

Figure 14 – Diaphragm Assembly

Cylinder #1 Cable Guide Assembly

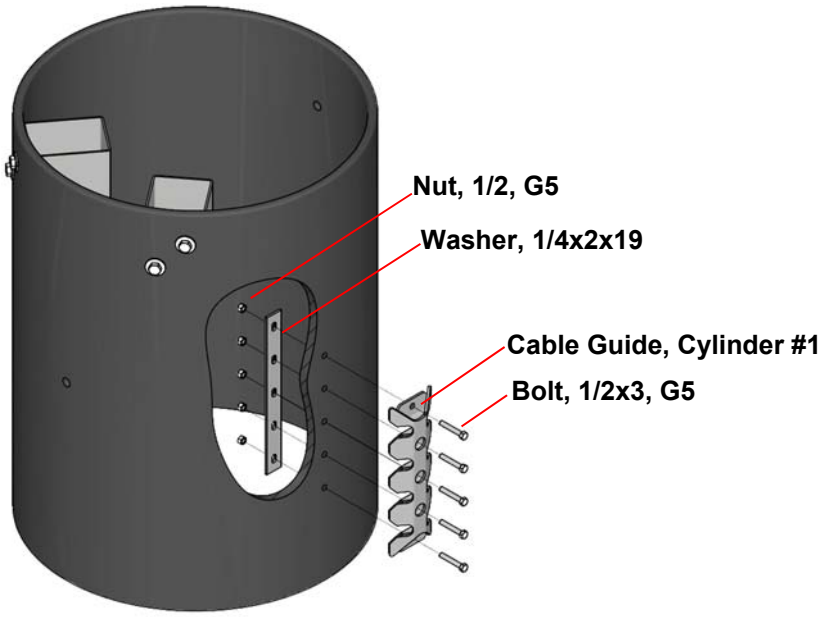

Figure 15 - Cylinder #1 Cable Guide Assembly

Cylinder #3 and #5 Cable Guide Assembly

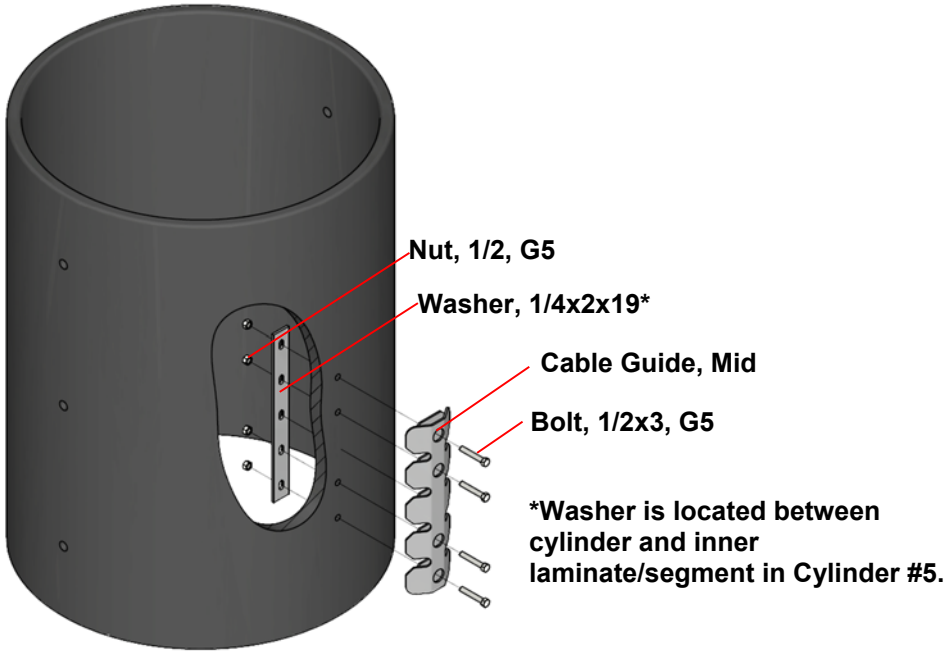

Figure 16 –Cylinder #3 and #5 Cable Guide Assembly

Cylinder Connection Assembly

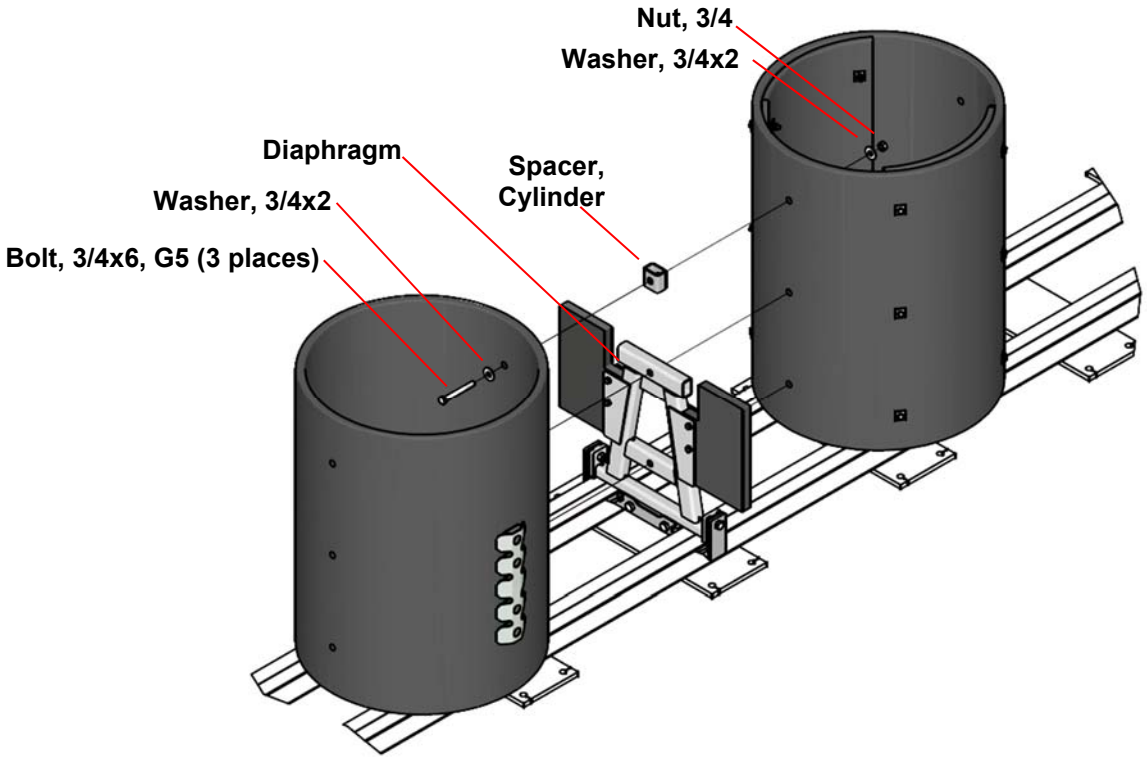

Figure 17 – Cylinder Connection Assembly

Cylinder Backup Connection Assembly

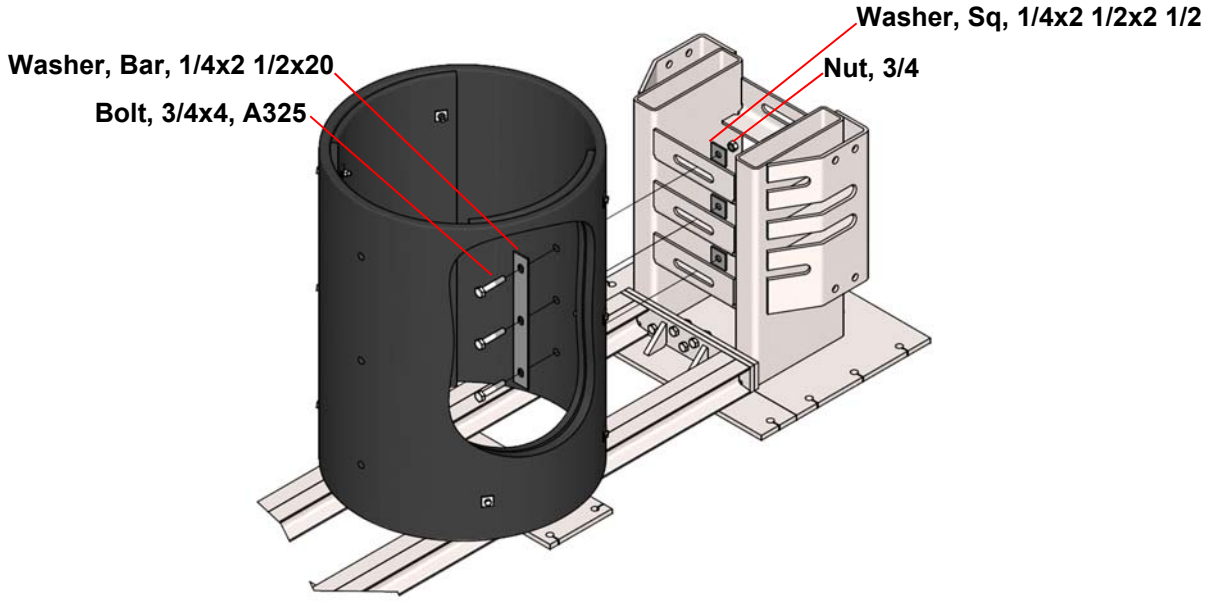

Figure 18 – Cylinder Backup Connection Assembly

Backup and Base Track Assembly

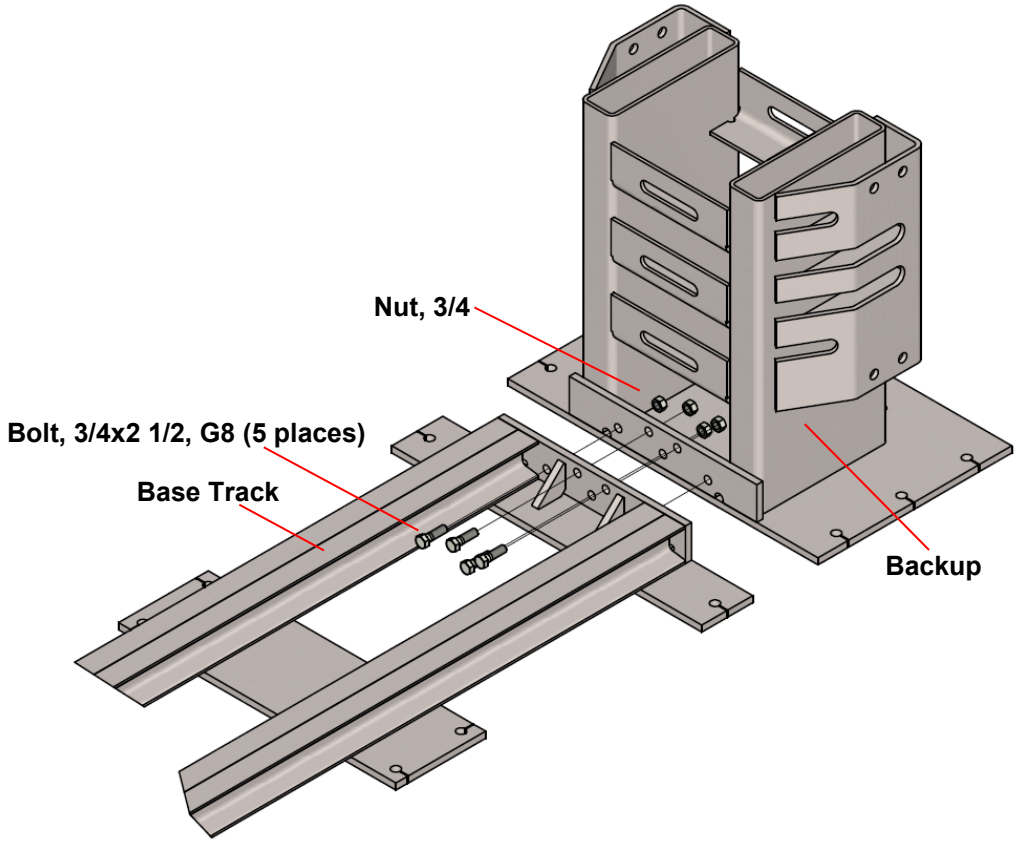

Figure 19 – Backup and Base Track Assembly

Cable Attachment Assembly

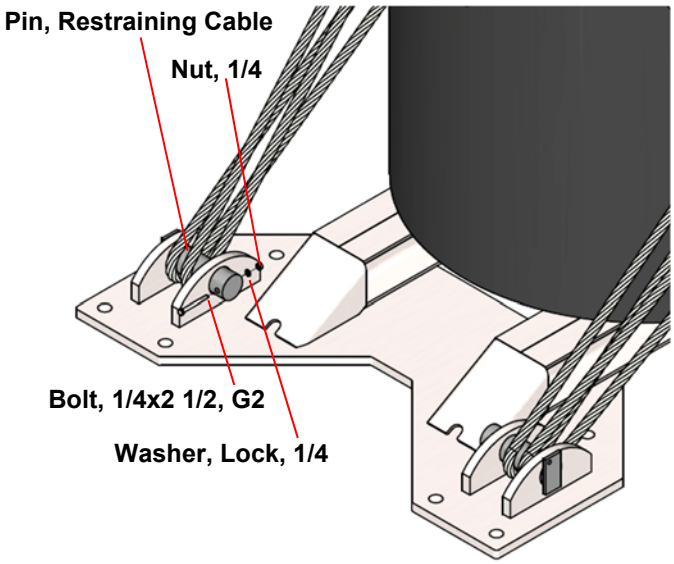

Figure 20a - Cable Attachment at Front of System

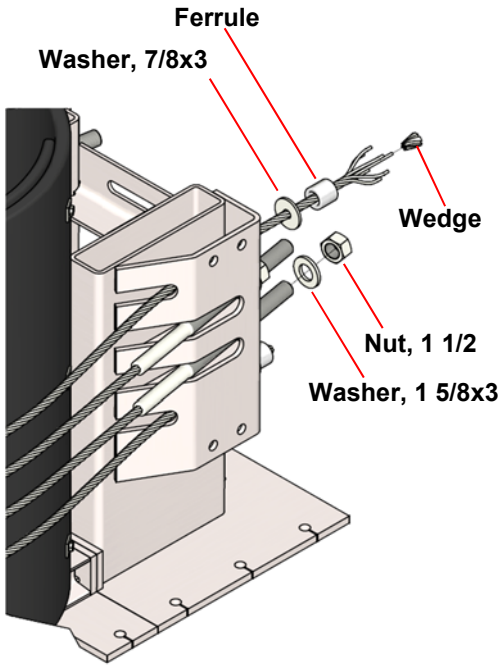

Figure 20b - Cable Attachment at Backup

Cylinder # 1 Tube Spacer Assembly

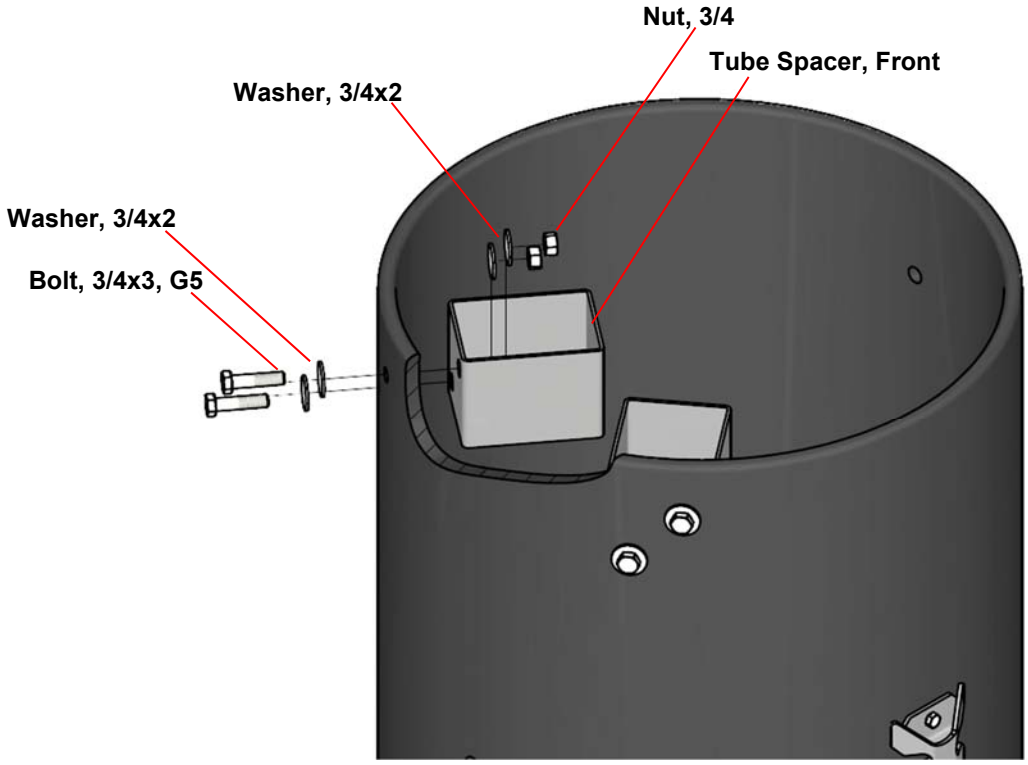

Figure 21 – Cylinder #1 Tube Spacer Assembly

Inspection Frequency

Inspections by the appropriate highway authority are recommended as determined by that authority based upon volume of traffic and impact history. Visual drive-by inspections are recommended at least once every three months. Walk-up inspections are recommended at least twice a year.

Visual Drive-By Inspection

1. Is the REACT™ M fully extended from the Backup? If not, a walk-up inspection will be necessary to determine the cause.

Caution: It is important to inspect a system after an impact even if it appears to be self-restored and fully maintained (p. 32). An unrestored system may retain stored energy. Again, only the local highway authority can determine if the system is reusable after impact.

2. Nose Cover and side reflectors (if required) in place?
3. Record the date, location, and system condition on a log sheet (p. 35).

Warning: Debris, snow, or ice inside the cylinders may prevent the REACT™ M from absorbing the impact of a crash as observed in MASH compliant crash testing. Perform a walk-up inspection as needed to check for and remove any debris inside or around the Cylinders. Failing to remove this debris or other material infringes upon the performance of the system as tested.

Walk-Up Inspection Checklist

- ☐ Remove debris found inside the REACT™ M Cylinders.
- ☐ Remove debris found under and around the REACT™ M.
- ☐ All fasteners are tight and rust free.
- ☐ Anchor studs are securely anchored (pp. 17-18, 21).
- ☐ Inspect all Diaphragm Outer Rail Guides.
- ☐ Replace any Cylinder that is cracked, damaged, or when the minor axis measures 18” [460 mm] or less (p. 34).
- ☐ All cables are attached and properly tensioned (p. 22).
- ☐ Transitions are properly attached (if applicable) (p. 19).
- ☐ Nose Cover and side reflectors are intact and undamaged (pp. 23-24).
- ☐ Note the location and condition of the REACT™ M and any work done for the date of this inspection. If further repair is necessary, note the repair requested (p. 35). Refer to the standard drawing and assembly section of this manual for more information.
- ☐ Replace damaged parts as soon as possible following the parts ordering procedure on page 36.

Post Impact

Checklist

- ☐ Deploy appropriate traffic control devices.

Warning: Review Release Collapsed System instructions on page 33.

- ☐ Remove debris inside the cylinders.
- ☐ Remove debris found under and around the system.
- ☐ The REACT™ M must be pulled out to its original length after each impact (p. 34).
- ☐ Replace any Cylinder that is cracked, damaged, or when the minor axis measures 18” [460 mm] or less (p. 34).
- ☐ All fasteners are tight and rust free.
- ☐ Replace any anchors that are loose, broken, or pulled out.
- ☐ Replace Diaphragm Outer Rail Guides if damaged.
- ☐ Replace Diaphragm Inner Rail Guides if damaged.
- ☐ Replace Diaphragms if damaged.
- ☐ Cables are properly attached and tensioned (p. 22).
- ☐ Base Track is undamaged.
- ☐ Backup is undamaged.
- ☐ Transitions are properly attached and undamaged (if applicable).
- ☐ Nose Cover and side reflectors are intact and undamaged.
- ☐ Note the location and condition of the REACT™ M and any work done for the date of this inspection on page 35. If further repair is necessary, note the repair requested. Refer to the standard drawing and assembly section of this manual for more information.
- ☐ Replace damaged parts as soon as possible following the parts ordering procedure (pp. 36-38).

Warning: Self-restoring systems have the ability to store energy that could cause sudden system movement and injury to maintenance workers. This condition would be visually evident by a system staying collapsed after an impact. Extreme compression of REACT™ M cylinders after an impact is an indication that the system is storing large amounts of energy. Every compressed REACT™ M repair must be done with caution.

Warning: **DO NOT** stand in front, on top, or put any portion of your body on or inside any part of a collapsed system. Instead, use a chain and truck to pull from the front of the system as explained below and the next pages.

Release Collapsed System

Before starting this procedure, please read and understand the previous **"Warning"** statements above. The following instructions outline a set of steps for positioning a large vehicle up against a compressed system to prevent unexpected system movement while maintenance workers are attempting to repair the system.

1. Position a truck of not less than 13,250 lbs. [6000 kg] centered on the system just in front of the Cylinder #1. The truck should be presenting its strongest bumper to the system. The selected bumper's height should be such that the center of the bumper rests on the middle of Cylinder #1 (approximately, 24" [610 mm] in height).
2. Drive the truck so that the bumper displaces Cylinder #1 approximately 6" [150 mm]. The driver should remain in the vehicle depressing the brake pedal after the vehicle has been placed in position.

Warning: Once the leading bumper is over the Base Track Assembly, the vehicle may be subject to forces by the system due to an unexpected restoration. The driver should be wearing a seat belt and have the vehicle in the lowest possible gear when approaching the system. In the event that the system unexpectedly expands before Step 2 is completed, the driver should apply the brakes immediately, bringing the vehicle to a controlled stop. The driver should then put the vehicle in neutral while still applying the brakes. Gradually release the brakes, allowing the system to push the vehicle back in a safe and controlled manner.

3. It should now be safe for a maintenance worker to inspect the system to determine where mechanical binding is present. Remove all debris from the system prior to checking for binding. The binding will probably be located at Diaphragm(s) and Rail Guides. Cautiously using a pry bar or jostling the system with a vehicle may aid in releasing any binding mechanisms. Once released, the driver should allow the system to extend in a safe and controlled manner.

Warning: Use caution when releasing any binding mechanism. Keep hands and other body parts clear of possible system interaction. Be aware of tools (pry bar, etc.) that could move unexpectedly if a bind is suddenly released.

4. Replace all damaged system components and reassemble per the REACT™ M manual.

System Reset

Warning: The REACT™ M must be pulled out to its original length after each impact.

1. Attach the Pullout Assembly to Cylinder #1 (Figure 22).

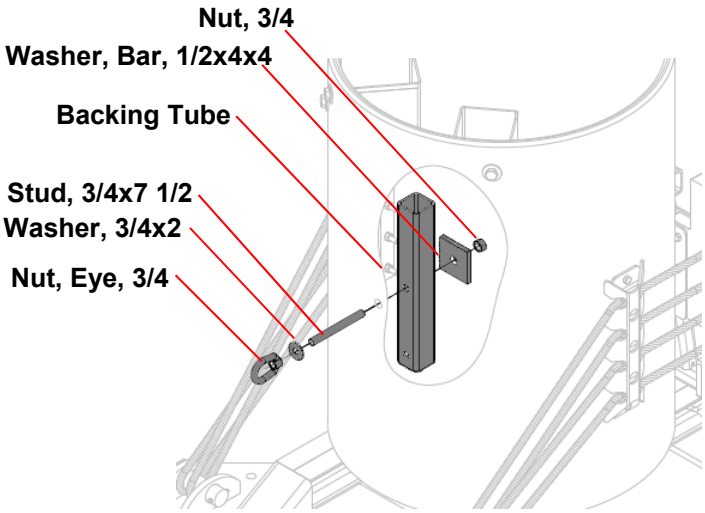

Figure 22 – Pullout Assembly

2. Pull the system to over-extension by using a work vehicle or other means.
3. Hold system in the extended position for at least 15 minutes.
4. Release the system slowly.
5. Remove and store the Pullout Assembly for future use.

Replace any cylinder if the minor axis measures 18” [460 mm] or less after System Reset (Figure 23). Cylinders will also need to be replaced if the system does not retain at effective length of at least 17’ [5.18 m] after System Reset (refer to p. 39 for effective length measurement).

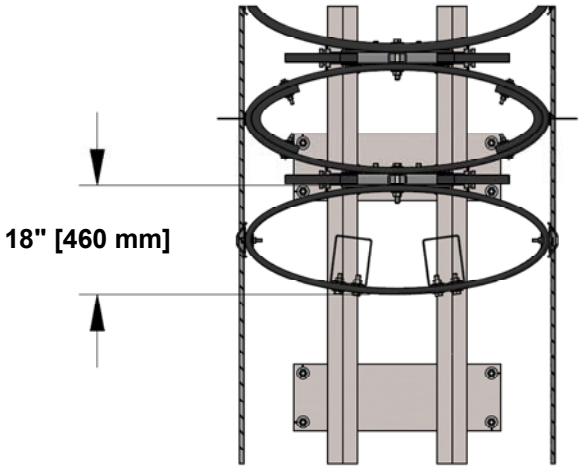

Figure 23 – Measure Minor Axis

REACT™ M Inspection Log

Location: _____

System Serial Number: _____

Date	Inspector	Condition	Maintenance Actions

Parts Ordering Procedure

1. Locate the Product Decal attached to the Backup. Copy the information from the decal.
2. Make a list of any damaged parts, using part numbers and descriptions found in the Drawing Package provided with the REACT™ M.

Warning: Use only Trinity Highway parts that are specified herein for assembling, maintaining, or repairing the REACT™ M. **Do not utilize or otherwise comingle parts from other systems even if those systems are other Trinity Highway systems.** Assembly, maintenance, or repairs using unspecified parts or accessories is strictly prohibited.

System Components & Quantities

PN	Description	Count
627671	B/U & Base Track Assembly, REACT M	1
627652	Cylinder Assembly #6	1
627673	Cylinder Assembly #5	1
627649	Cylinder Assembly #4	1
627646	Cylinder Assembly #3	1
627636	Cylinder Assembly #2	1
627644	Cylinder Assembly #1	1
627621	Diaphragm, REACT M	5
627612	HDPE 1 1/2x12 3/16x18	10
627630	Rail Guide, Inner	5
627626	Rail Guide, Outer	10
627631	Spacer, Cylinder	5
113479	Bolt, Hex, 1/2x3,G5, All Thread	20
115940	Nut, Hex, 1/2, G5	20
113551	Bolt, Hex, 3/4x2 1/2, G8	10
113568	Bolt, Hex, 3/4x4, G5, All Thread	10
003704	Nut, Hex, 3/4, Heavy, A563 DH	38
113577	Bolt, Hex, 3/4x6, G5	15
118027	Washer, Flat, 3/4x2, Heavy	30
004708	Bolt, Hex, 3/4x4, A325	3
627623	Washer, Square, 1/4x2 1/2x2 1/2	3
627622	Washer, Bar, 1/4x2 1/2x20, w/Slots	1
627633	Cable Assembly, REACT M	1
612040	Pin, Restraining Cable	2
113512	Bolt, Hex, 1/4x2 1/2, G2	2
118085	Washer, Lock, 1/4	2
115946	Nut, Hex, 1/4	2
619316	Anchor Kit, Hilti, 3/4x7, (4)	9

Vertical Wall Unidirectional Transition Components

PN	Description	Count
627570	Adapter, Transition, Vert, Uni	1
113551	Bolt, Hex, 3/4x2 1/2, G8	4
003704	Nut, Hex, 3/4, Heavy, A563 DH	4
619316	Anchor Kit, Hilti, 3/4x7, (4)	1

Vertical Wall Bidirectional Transition Components

PN	Description	Count
627700	Adapter, Transition, REACT M	1
000975	T10/ End Shoe	2
627794	Rail, Transition, Thrie, Stiff	1
627793	Support, Transition, REACT M	1
006135	Wood Block, 6x8.5x13, Tapered	2
113551	Bolt, Hex, 3/4x2 1/2, G8	4
113547	Bolt, Hex, 3/4x1 1/2, G5	6
118027	Washer, Flat, 3/4x2, Heavy	6
003704	Nut, Hex, 3/4, Heavy, A563 DH	10
003360	Bolt, Rail, 5/8x1 1/4	26
004412	Bolt, Lag, 5/8x3, A307	2
003320	Washer, Guardrail	24
003300	Washer, Flat, 5/8x1 3/4	2
003340	Nut, Hex, 5/8, Rail	26
619316	Anchor Kit, Hilti, 3/4x7, (4)	2

Safety Shape Bidirectional Transition Components

PN	Description	Count
627567	Adapter, Transition, W-Beam	1
113551	Bolt, Hex, 3/4x2 1/2, G8	4
003704	Nut, Hex, 3/4, Heavy, A563 DH	8
000926	10/End Shoe/ Extra Hole	2
113547	Bolt, Hex, 3/4x1 1/2, G5	4
118027	Washer, Flat, 3/4x2, Heavy	4
627568	Rail, Transition, W-Beam, Stiff	1
003360	Bolt, Rail, 5/8x1 1/4	18
003340	Nut, Hex, 5/8, Rail	18
003320	Washer, Guardrail	16
627793	Support, Transition, REACT M	1
006135	Wood Block, 6x8.5x13, Tapered	2
004412	Bolt, Lag, 5/8x3, A307	2
003300	Washer, Flat, 5/8x1 3/4	2
619316	Anchor Kit, Hilti, 3/4x7, (4)	1

Optional Components

PN	Description	Count
617967	Nose Cover Assembly, Gore	1
617968	Nose Cover Assembly, Universal	1
613706	Reflector Assembly, White/Amber, (6)	1
612816	Pullout Assembly, REACT	1
113797	Brush, Hilti, 7/8	1
626537	Anchor Plate, PCMB, New Jersey Shape	6
626856	Anchor Plate, PCMB, F-Shape	6

Drawings

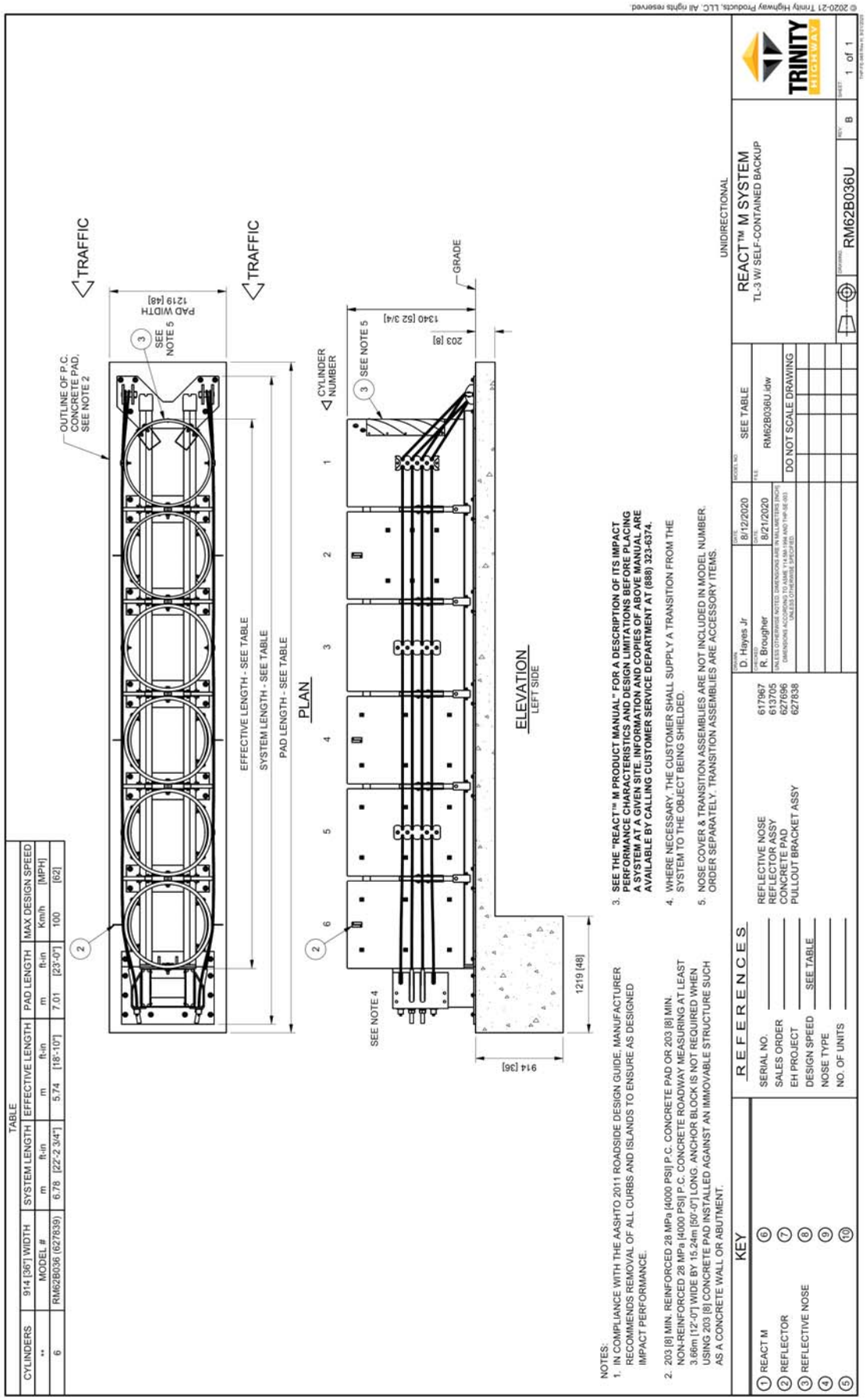
TABLE
CYLINDERS | 914 [36"] WIDTH | SYSTEM LENGTH | EFFECTIVE LENGTH | PAD LENGTH | MAX DESIGN SPEED
** | MODEL # | m ft-in | m ft-in | m ft-in | Km/h [MPH]
6 | RM62B036 (627839) | 6.78 [22'-2 3/4"] | 5.74 [18'-10"] | 7.01 [23'-0"] | 100 [62]
TRAFFIC
TRAFFIC
OUTLINE OF P.C. CONCRETE PAD. SEE NOTE 2
SEE NOTE 5
PAD WIDTH
1219 [48]
EFFECTIVE LENGTH - SEE TABLE
SYSTEM LENGTH - SEE TABLE
PAD LENGTH - SEE TABLE
PLAN
CYLINDER NUMBER
SEE NOTE 5
1340 [52 3/4]
203 [8]
GRADE
SEE NOTE 4
914 [36]
1219 [48]
ELEVATION
LEFT SIDE
NOTES:
1. IN COMPLIANCE WITH THE AASHTO 2011 ROADSIDE DESIGN GUIDE, MANUFACTURER RECOMMENDS REMOVAL OF ALL CURBS AND ISLANDS TO ENSURE AS DESIGNED IMPACT PERFORMANCE.
2. 203 [8] MIN. REINFORCED 28 MPa [4000 PSI] P.C. CONCRETE PAD OR 203 [8] MIN. NON-REINFORCED 28 MPa [4000 PSI] P.C. CONCRETE ROADWAY MEASURING AT LEAST 3.66m [12'-0"] WIDE BY 15.24m [50'-0"] LONG. ANCHOR BLOCK IS NOT REQUIRED WHEN USING 203 [8] CONCRETE PAD INSTALLED AGAINST AN IMMOVABLE STRUCTURE SUCH AS A CONCRETE WALL OR ABUTMENT.
3. SEE THE "REACT™ M PRODUCT MANUAL" FOR A DESCRIPTION OF ITS IMPACT PERFORMANCE CHARACTERISTICS AND DESIGN LIMITATIONS BEFORE PLACING A SYSTEM AT A GIVEN SITE. INFORMATION AND COPIES OF ABOVE MANUAL ARE AVAILABLE BY CALLING CUSTOMER SERVICE DEPARTMENT AT (888) 323-6374.
4. WHERE NECESSARY, THE CUSTOMER SHALL SUPPLY A TRANSITION FROM THE SYSTEM TO THE OBJECT BEING SHIELDED.
5. NOSE COVER & TRANSITION ASSEMBLIES ARE NOT INCLUDED IN MODEL NUMBER. ORDER SEPARATELY. TRANSITION ASSEMBLIES ARE ACCESSORY ITEMS.
KEY
1 REACT M
2 REFLECTOR
3 REFLECTIVE NOSE
4
5
6
7
8
9
10
REFERENCES
SERIAL NO.
SALES ORDER
EH PROJECT
DESIGN SPEED SEE TABLE
NOSE TYPE
NO. OF UNITS
REFLECTIVE NOSE 617967
REFLECTOR ASSY 613705
CONCRETE PAD 627696
PULLOUT BRACKET ASSY 627838
D. Hayes Jr 8/12/2020
R. Brougher 8/21/2020
SEE TABLE
RM62B036U.idw
DO NOT SCALE DRAWING
UNIDIRECTIONAL
REACT™ M SYSTEM
TL-3 W/ SELF-CONTAINED BACKUP
TRINITY HIGHWAY
RM62B036U
B
1 of 1
REACT™ M RM62B036U
© 2020-21 Trinity Highway Products, LLC. All rights reserved.

PARTS LIST			
ITEM	PART NO.	DESCRIPTION	QTY.
1	627682	REACT M,36",6 CYLINDER	1
2	612816	PULLOUT ASSEMBLY	1
3	613706	REFLECTOR ASSY,WHT/AMBER,SIDE	1
4	113797	HIT-RB 7/8" KIT	1
5	115674	MATERIAL SAFETY INFORMATION NOTICE	1
6	626195	MANUAL,PRODUCT/ASSY,REACT M	1

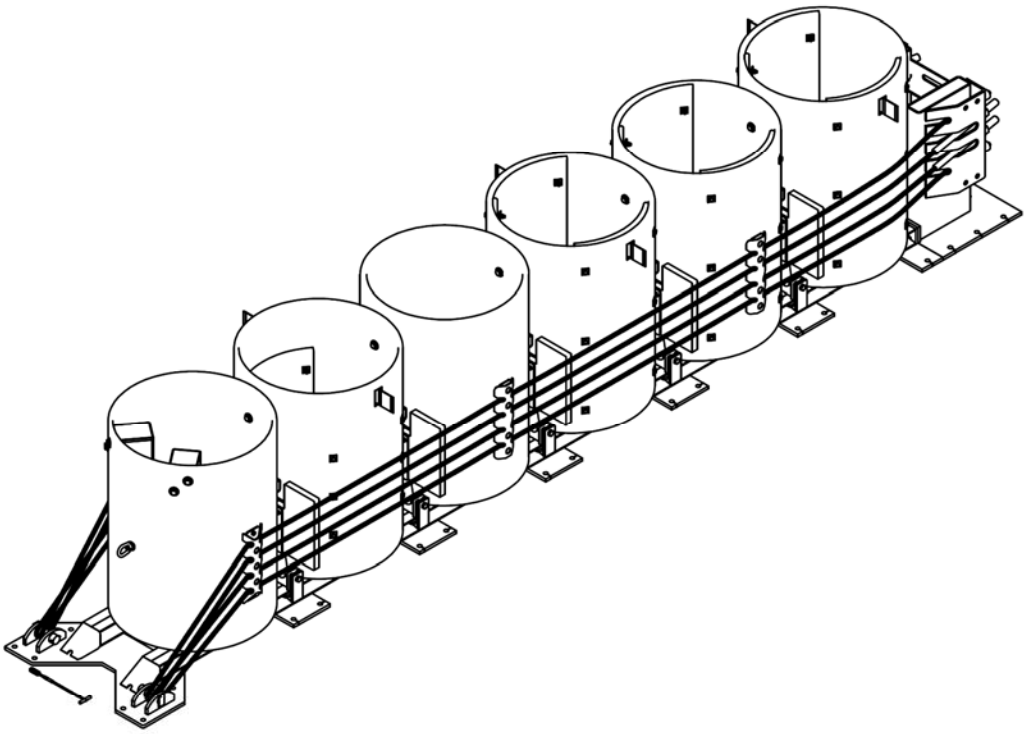

MATERIAL: SEE PARTS LIST

FINISH: N/A

EST SURFACE AREA: N/A

EST UNFINISHED WT: 4928 lbs

DRAWN: D. Hayes Jr — DATE: 11/16/2020

CHECKED: A. Van Brocklin — DATE: 11/24/2020

UNLESS OTHERWISE NOTED, ALL DIMENSIONS ARE IN INCHES. DIMENSIONS ACCORDING TO ASME Y14.5M AND THP-SE-003 UNLESS OTHERWISE SPECIFIED.

TOLERANCES PER THP-SF-001 UNLESS OTHERWISE SPECIFIED.

DO NOT SCALE DRAWING

REACT M,36",6 CYL,W/ REFLECTORS

TRINITY HIGHWAY

DRAWING: 627839 — REV: - — SHEET: 1 of 1

THP-FE-044 Rev G, 6/5/2020

© 2020 Trinity Highway Products, LLC. All rights reserved.

REACT™ M w/Reflectors 627839

TABLE									
CYLINDERS	914 [36"] WIDTH	SYSTEM LENGTH		EFFECTIVE LENGTH		PAD LENGTH		MAX DESIGN SPEED	
**	MODEL #	m	ft-in	m	ft-in	m	ft-in	Km/h	[MPH]
6	RM62B036 (627839)	6.78	[22'-2 3/4"]	5.74	[18'-10"]	7.01	[23'-0"]	100	[62]

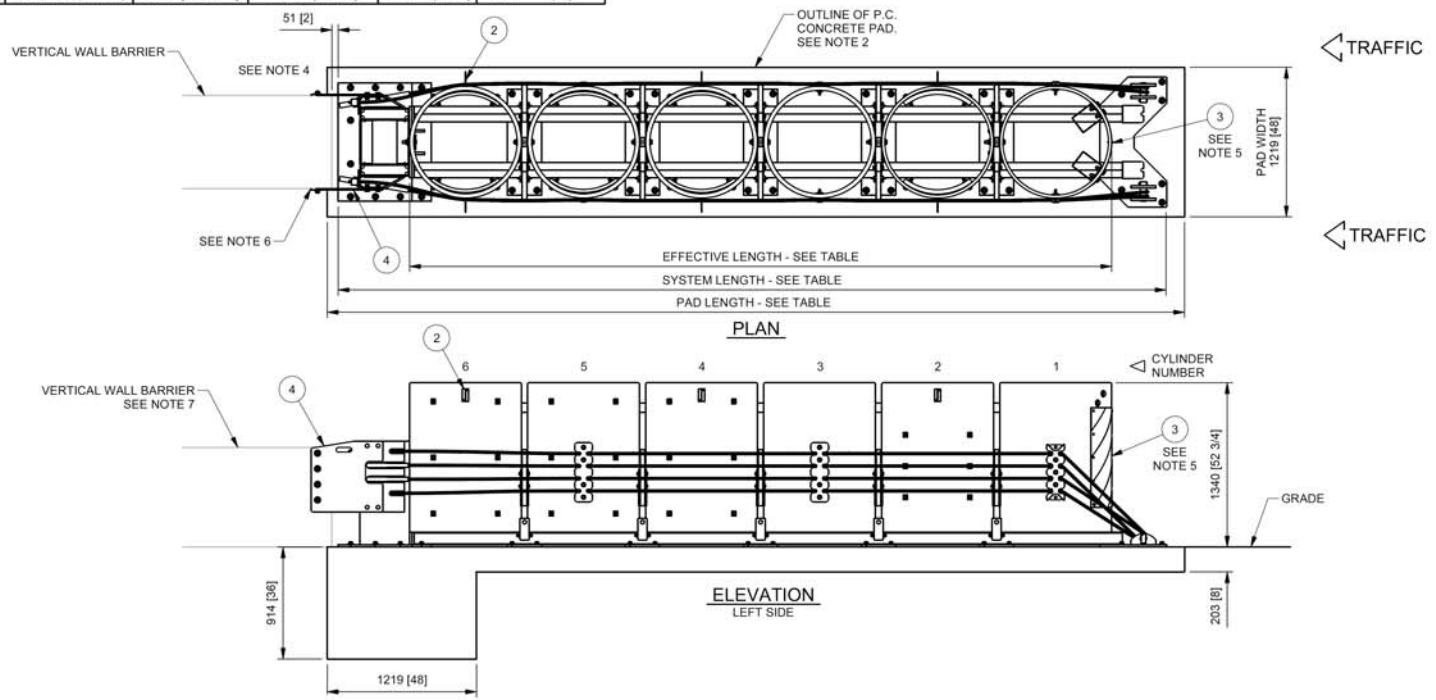

NOTES:

1. IN COMPLIANCE WITH THE AASHTO 2011 ROADSIDE DESIGN GUIDE, MANUFACTURER RECOMMENDS REMOVAL OF ALL CURBS AND ISLANDS TO ENSURE AS DESIGNED IMPACT PERFORMANCE.
2. 203 [8] MIN. REINFORCED 28 MPa [4000 PSI] P.C. CONCRETE PAD OR 203 [8] MIN. NON-REINFORCED 28 MPa [4000 PSI] P.C. CONCRETE ROADWAY MEASURING AT LEAST 3.66m [12'-0"] WIDE BY 15.24m [50'-0"] LONG. ANCHOR BLOCK IS NOT REQUIRED WHEN USING 203 [8] CONCRETE PAD INSTALLED AGAINST AN IMMOVABLE STRUCTURE SUCH AS A CONCRETE WALL OR ABUTMENT.
3. **SEE THE "REACT™ M PRODUCT MANUAL" FOR A DESCRIPTION OF ITS IMPACT PERFORMANCE CHARACTERISTICS AND DESIGN LIMITATIONS BEFORE PLACING A SYSTEM AT A GIVEN SITE. INFORMATION AND COPIES OF ABOVE MANUAL ARE AVAILABLE BY CALLING CUSTOMER SERVICE DEPARTMENT AT (888) 323-6374.**
4. WHERE NECESSARY, THE CUSTOMER SHALL SUPPLY A TRANSITION FROM THE SYSTEM TO THE OBJECT BEING SHIELDED.
5. NOSE COVER & TRANSITION ASSEMBLIES ARE NOT INCLUDED IN MODEL NUMBER. ORDER SEPARATELY. TRANSITION ASSEMBLIES ARE ACCESSORY ITEMS.
6. ON TRANSITION SIDE(S) OF SYSTEM, EDGE OF BARRIER SHALL BE ALIGNED WITH EDGE OF REACT M BACKUP +/- 25 [1].
7. IF BARRIER HEIGHT IS OVER 813 [32] HIGH, TRIM BARRIER TOP AT A 1:4 TAPER TO PREVENT VEHICLE CONTACT.

UNIDIRECTIONAL

KEY

1 REACT M	6
2 REFLECTOR	7
3 REFLECTIVE NOSE	8
4 TRANSITION	9
5	10

REFERENCES

SERIAL NO.		REFLECTIVE NOSE	617967
SALES ORDER		REFLECTOR ASSY	613705
EH PROJECT		CONCRETE PAD	627696
DESIGN SPEED	SEE TABLE	PULLOUT BRACKET ASSY	627838
NOSE TYPE		TRANSITION ASSY	627573
NO. OF UNITS			

DRAWN: R. VENZON	DATE: 12/15/2020	MODEL NO: SEE TABLE	
CHECKED: B. SINDORF	DATE: 12/30/2020	FILE: RM62B036U-TVLR.idw	
UNLESS OTHERWISE NOTED: DIMENSIONS ARE IN MILLIMETERS [INCH] DIMENSIONS ACCORDING TO ASME Y14.5M-1994 AND THP-SE-003 UNLESS OTHERWISE SPECIFIED		DO NOT SCALE DRAWING	

REACT™ M SYSTEM
TL-3 W/ SELF-CONTAINED BACKUP & VERTICAL WALL TRANSITION ADAPTER (L/R)

TRINITY HIGHWAY

DRAWING: RM62B036U-TVLR | REV: - | SHEET: 1 of 1

THP-FE-046 Rev H 3/21/2020

© 2020 Trinity Highway Products, LLC. All rights reserved.

REACT™ M RM62B036U-TVLR

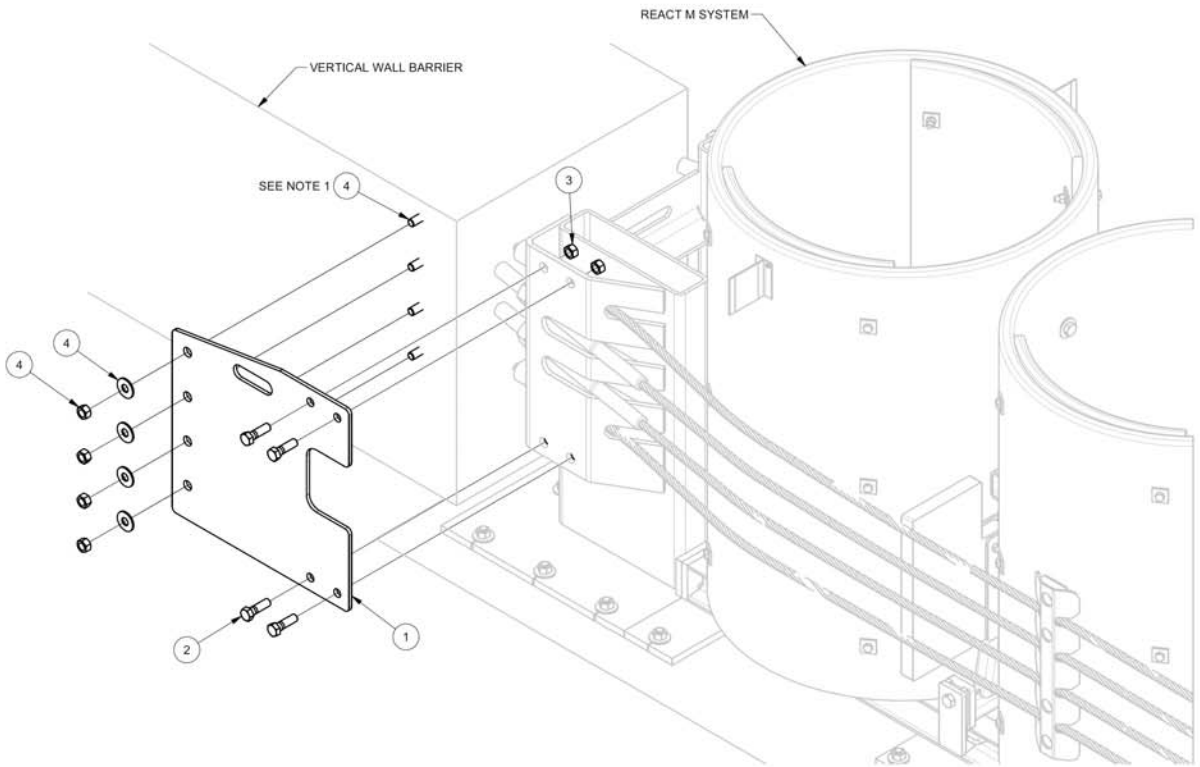

COMPONENTS	
ITEM	DESCRIPTION
1	ADAPTER,TRANS,VERT,UNI,REACT M
2	BOLT,HX,3/4X2 1/2,G8,G
3	3/4" HVY HEX NUT A563 DH
4	ANCHOR KIT,HILTI,330ml,3/4X7,(4)

TABLE	
ASSY NO.	APPLICATION
627572	VERTICAL WALL

NOTES:
1. USE TRANSITION ADAPTER (ITEM 1) AS TEMPLATE FOR DRILLING. ENSURE FLUSH FIT TO BARRIER. RECOMMENDED HOLE DEPTH: 146 [5 3/4]. FINAL TORQUE TO BE 135Nm [100 ft-lb]
2. LEFT SIDE OF ROAD APPLICATION SHOWN. ASSEMBLY MAY BE USED ON EITHER OR BOTH SIDES FOR LEFT, RIGHT, MEDIAN OR GORE APPLICATIONS.

DRAWN: R. VENZON	DATE: 12/16/2020	UNLESS OTHERWISE SPECIFIED, DIMENSIONS ARE IN MILLIMETERS [INCH] AND ACCORDING TO ASME Y14.5M-1994 AND THP-SE-003	TRANS,ASSY,VERT WALL,UNI
CHECKED: B. SINDORF	DATE: 12/30/2020	DO NOT SCALE DRAWING	DRAWING: 627573 REV: - SHEET: 1 of 2

TRINITY HIGHWAY

© 2020 Trinity Highway Products, LLC. All rights reserved.

THP-PE-060 Rev A, 9/21/2020

Vertical Wall Transition Plate, Unidirectional Only 627573

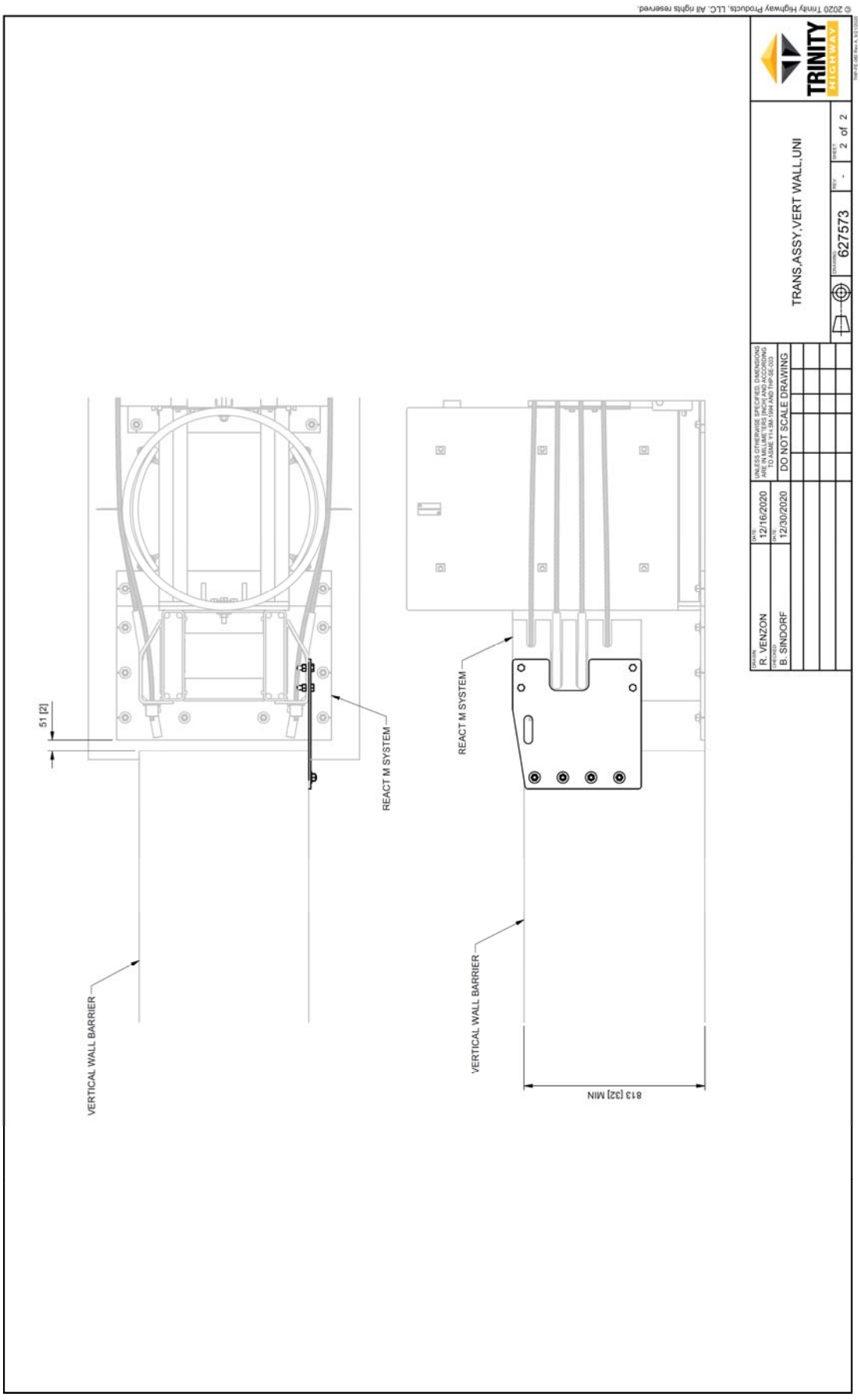
51 [2]
REACT M SYSTEM
VERTICAL WALL BARRIER
REACT M SYSTEM
VERTICAL WALL BARRIER
813 [32] MIN
TRANS,ASSY,VERT WALL,UNI
627573
2 of 2
DO NOT SCALE DRAWING
R. VENZON
B. SINDORF
12/16/2020
12/30/2020
TRINITY HIGHWAY
© 2020 Trinity Highway Products, LLC. All rights reserved.

TABLE									
CYLINDERS	914 [36"] WIDTH	SYSTEM LENGTH		EFFECTIVE LENGTH		PAD LENGTH		MAX DESIGN SPEED	
**	MODEL #	m	ft-in	m	ft-in	m	ft-in	Km/h	[MPH]
6	RM62B036 (627839)	6.78	[22'-2 3/4"]	5.74	[18'-10"]	7.01	[23'-0"]	100	[62]

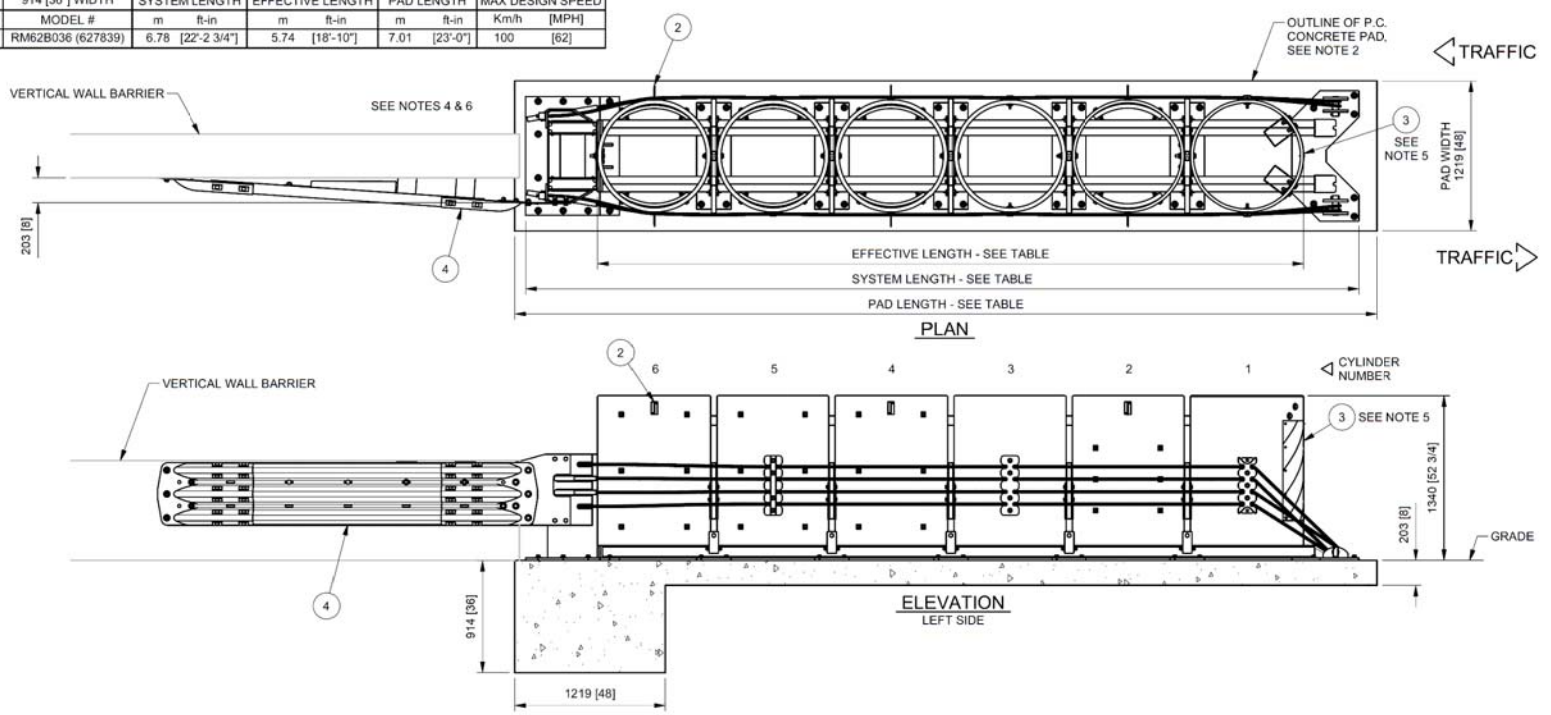

NOTES:

1. IN COMPLIANCE WITH THE AASHTO 2011 ROADSIDE DESIGN GUIDE, MANUFACTURER RECOMMENDS REMOVAL OF ALL CURBS AND ISLANDS TO ENSURE AS DESIGNED IMPACT PERFORMANCE.
2. 203 [8] MIN. REINFORCED 28 MPa [4000 PSI] P.C. CONCRETE PAD OR 203 [8] MIN. NON-REINFORCED 28 MPa [4000 PSI] P.C. CONCRETE ROADWAY MEASURING AT LEAST 3.66m [12'-0"] WIDE BY 15.24m [50'-0"] LONG. ANCHOR BLOCK IS NOT REQUIRED WHEN USING 203 [8] CONCRETE PAD INSTALLED AGAINST AN IMMOVABLE STRUCTURE SUCH AS A CONCRETE WALL OR ABUTMENT.
3. **SEE THE "REACT™ M PRODUCT MANUAL" FOR A DESCRIPTION OF ITS IMPACT PERFORMANCE CHARACTERISTICS AND DESIGN LIMITATIONS BEFORE PLACING A SYSTEM AT A GIVEN SITE. INFORMATION AND COPIES OF ABOVE MANUAL ARE AVAILABLE BY CALLING CUSTOMER SERVICE DEPARTMENT AT (888) 323-6374.**
4. WHERE NECESSARY, THE CUSTOMER SHALL SUPPLY A TRANSITION FROM THE SYSTEM TO THE OBJECT BEING SHIELDED.
5. NOSE COVER & TRANSITION ASSEMBLIES ARE NOT INCLUDED IN MODEL NUMBER. ORDER SEPARATELY. TRANSITION ASSEMBLIES ARE ACCESSORY ITEMS.
6. IF BARRIER HEIGHT IS OVER 813 [32], TRIM BARRIER TOP AT 1:4 TAPER TO PREVENT VEHICLE CONTACT.

BIDIRECTIONAL

KEY

(1) REACT M	(6)
(2) REFLECTOR	(7)
(3) REFLECTIVE NOSE	(8)
(4) TRANSITION	(9)
(5)	(10)

REFERENCES

SERIAL NO. _____
SALES ORDER _____
EH PROJECT _____
DESIGN SPEED SEE TABLE
NOSE TYPE _____
NO. OF UNITS _____

REFLECTIVE NOSE	617967
REFLECTOR ASSY	613705
CONCRETE PAD	627696
PULLOUT BRACKET ASSY	627838
TRANSITION ASSY	627843

DRAWN: D. Hayes Jr	DATE: 11/19/2020	MODEL NO: SEE TABLE	REACT™ M SYSTEM TL-3 W/ SELF-CONTAINED BACKUP & 8" OFFSET VERTICAL WALL TRANSITION (L/R)
CHECKED: A. Van Brocklin	DATE: 11/25/2020	FILE: RM62B036B-T8VLR.idw	
UNLESS OTHERWISE NOTED, DIMENSIONS ARE IN MILLIMETERS [INCH]. DIMENSIONS ACCORDING TO ASME Y14.5M-1994 AND THP-SE-003 UNLESS OTHERWISE SPECIFIED.		DO NOT SCALE DRAWING	DRAWING: RM62B036B-T8VLR REV: A SHEET: 1 of 1

© 2020-21 Trinity Highway Products, LLC. All rights reserved.

REACT™ M RM62B036B-T8VLR

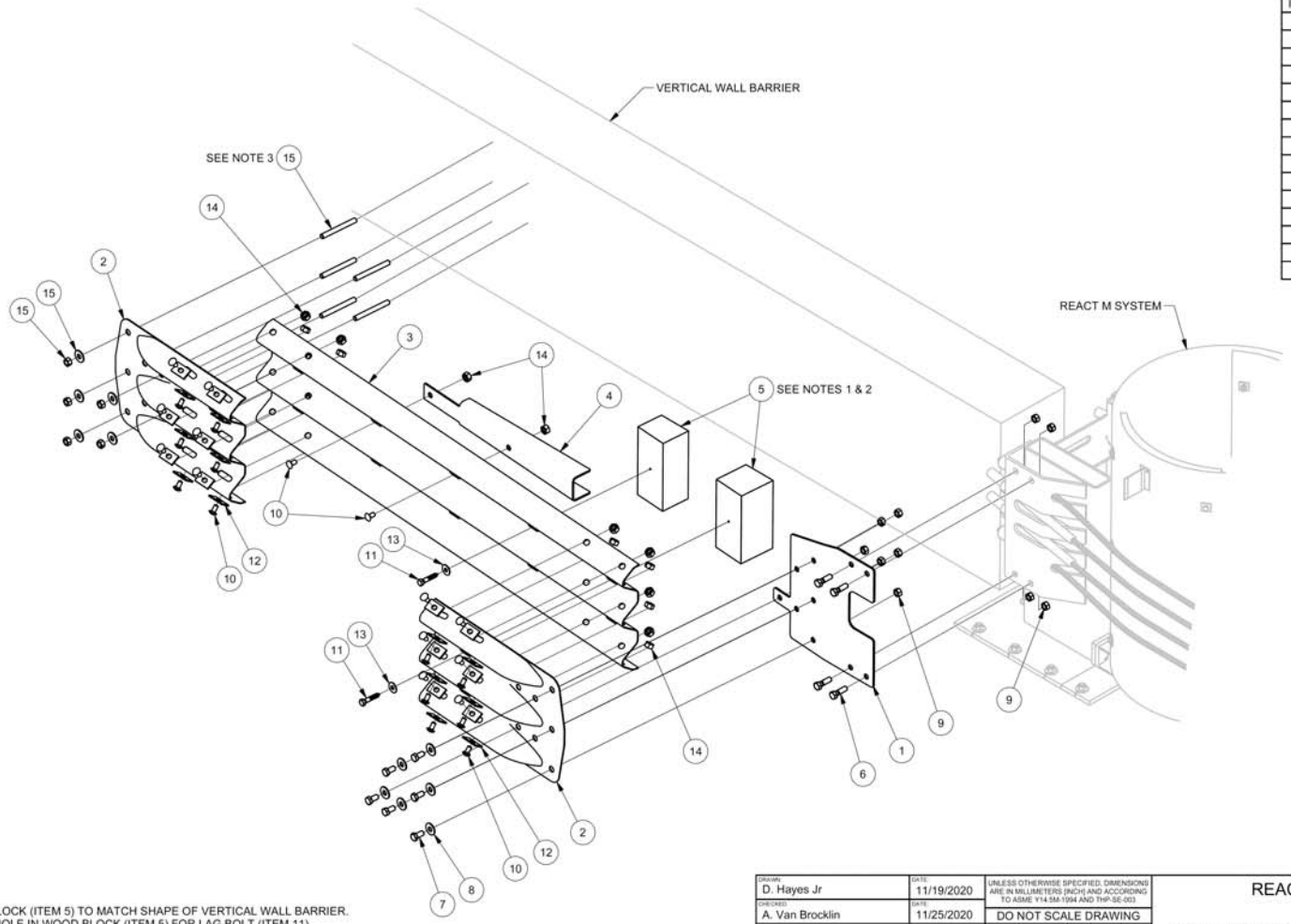

COMPONENTS	
ITEM	DESCRIPTION
1	ADAPTER,TRANSITION,REACT M
2	T10/END SHOE
3	RAIL,TRANSITION,THRIE,STIFF
4	SUPPORT,TRANSITION,REACT M
5	WD BLK 6X8.5X13 TPRD
6	BOLT,HX,3/4X2 1/2,G8,G
7	BOLT,HX,3/4X1 1/2,G5,G
8	WASHER,FLAT,3/4X2,HVY,G
9	3/4" HVY HEX NUT A563 DH
10	5/8"X1.25" GR BOLT
11	5/8"X3" LAG BOLT A307
12	WASHER, GUARDRAIL,G
13	WASHER,FLAT,5/8 X 1 3/4, G
14	NUT,HX,5/8,G,RAIL
15	ANCHOR KIT,HILTI,330ml,3/4X7,(4)

TABLE	
ASSY NO.	APPLICATION
627795	VERTICAL WALL

NOTES:
1. CUT WOOD BLOCK (ITEM 5) TO MATCH SHAPE OF VERTICAL WALL BARRIER.
2. DRILL PILOT HOLE IN WOOD BLOCK (ITEM 5) FOR LAG BOLT (ITEM 11).
3. USE TRANSITION END SHOE (ITEM 2) AS TEMPLATE FOR DRILLING. RECOMMENDED HOLE DEPTH: 149 [5 7/8]. FINAL TORQUE TO BE 135Nm [100 ft-lb].
4. LEFT SIDE OF ROAD APPLICATION SHOWN. ASSEMBLY MAY BE USED ON EITHER OR BOTH SIDES FOR LEFT, RIGHT, MEDIAN OR GORE APPLICATIONS.

DRAWN: D. Hayes Jr	DATE: 11/19/2020	UNLESS OTHERWISE SPECIFIED, DIMENSIONS ARE IN MILLIMETERS [INCH] AND ACCORDING TO ASME Y14.5M-1994 AND THP-SE-003.	REACT™ M
CHECKED: A. Van Brocklin	DATE: 11/25/2020	DO NOT SCALE DRAWING	TRANSITION ASSY,VERTICAL WALL
			DRAWING: 627843 REV: A SHEET: 1 of 2

© 2020-21 Trinity Highway Products, LLC. All rights reserved.

Vertical Wall Transition Assembly 627843

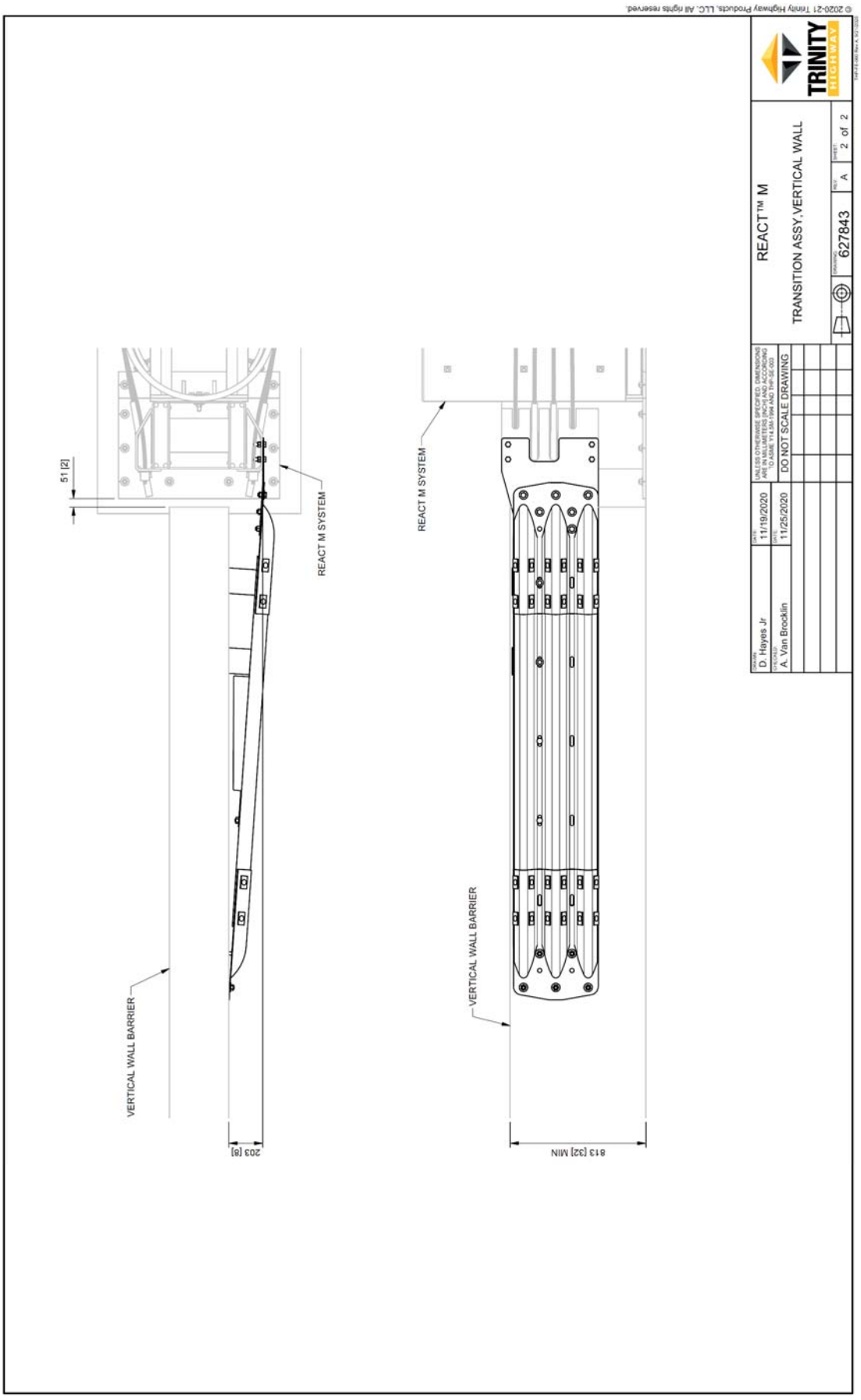
© 2020-21 Trinity Highway Products, LLC. All rights reserved.
TRINITY HIGHWAY
REACT™ M
TRANSITION ASSY,VERTICAL WALL
DRAWING 627843
REV A
SHEET 2 of 2
DRAWN D. Hayes Jr
DATE 11/19/2020
CHECKED A. Van Brocklin
DATE 11/25/2020
UNLESS OTHERWISE SPECIFIED, DIMENSIONS ARE IN MILLIMETERS AND ARE ACCORDING TO ASME Y14.5M-1994 AND THP-SE-003
DO NOT SCALE DRAWING
51 [2]
REACT M SYSTEM
VERTICAL WALL BARRIER
203 [8]
REACT M SYSTEM
VERTICAL WALL BARRIER
813 [32] MIN

TABLE									
CYLINDERS	914 [36"] WIDTH	SYSTEM LENGTH		EFFECTIVE LENGTH		PAD LENGTH		MAX DESIGN SPEED	
**	MODEL #	m	ft-in	m	ft-in	m	ft-in	Km/h	[MPH]
6	RM62B036 (627839)	6.78	[22'-2 3/4"]	5.74	[18'-10"]	7.01	[23'-0"]	100	[62]

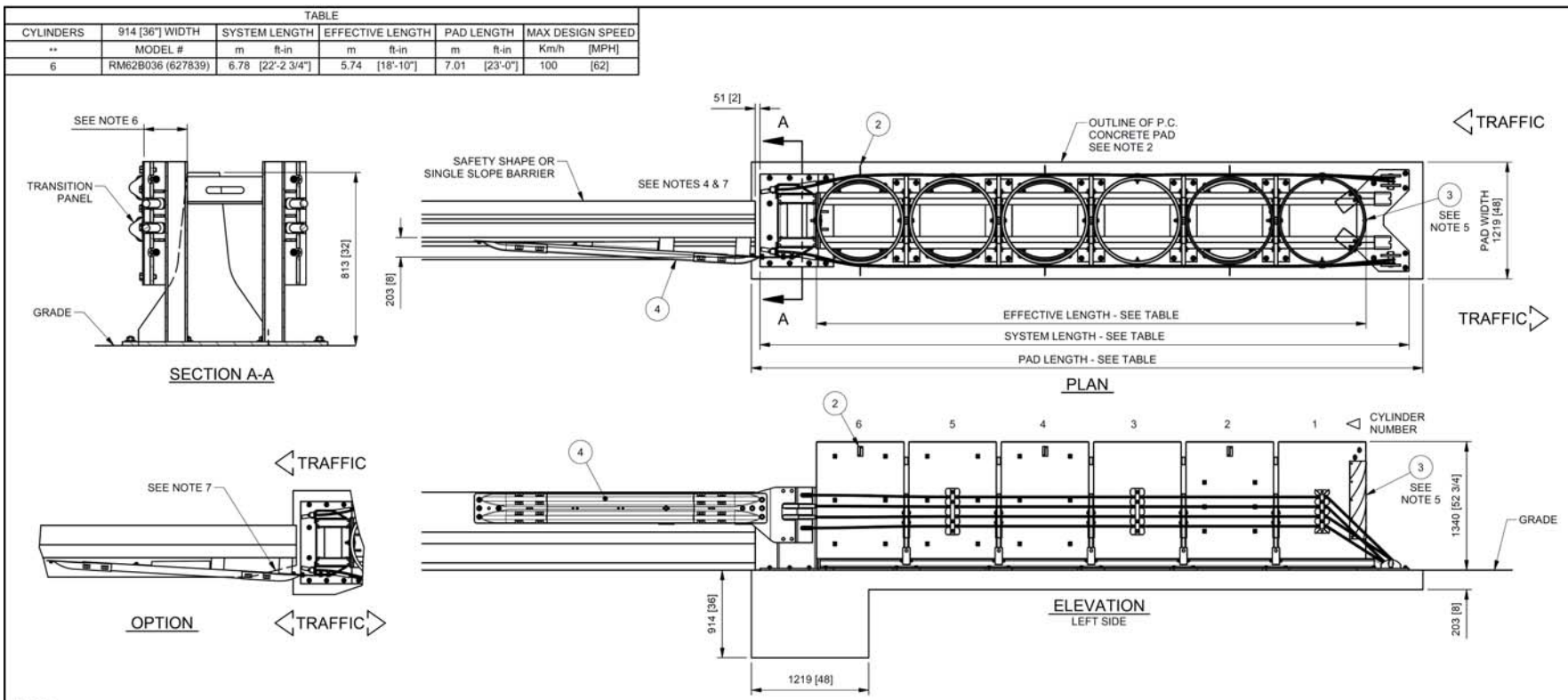

NOTES:
1. IN COMPLIANCE WITH THE AASHTO 2011 ROADSIDE DESIGN GUIDE, MANUFACTURER RECOMMENDS REMOVAL OF ALL CURBS AND ISLANDS TO ENSURE AS DESIGNED IMPACT PERFORMANCE.
2. 203 [8] MIN. REINFORCED 28 MPa [4000 PSI] P.C. CONCRETE PAD OR 203 [8] MIN. NON-REINFORCED 28 MPa [4000 PSI] P.C. CONCRETE ROADWAY MEASURING AT LEAST 3.66m [12'-0"] WIDE BY 15.24m [50'-0"] LONG. ANCHOR BLOCK IS NOT REQUIRED WHEN USING 203 [8] CONCRETE PAD INSTALLED AGAINST AN IMMOVABLE STRUCTURE SUCH AS A CONCRETE WALL OR ABUTMENT.
3. SEE THE "REACT™ M PRODUCT MANUAL" FOR A DESCRIPTION OF ITS IMPACT PERFORMANCE CHARACTERISTICS AND DESIGN LIMITATIONS BEFORE PLACING A SYSTEM AT A GIVEN SITE. INFORMATION AND COPIES OF ABOVE MANUAL ARE AVAILABLE BY CALLING CUSTOMER SERVICE DEPARTMENT AT (888) 323-6374.
4. WHERE NECESSARY, THE CUSTOMER SHALL SUPPLY A TRANSITION FROM THE SYSTEM TO THE OBJECT BEING SHIELDED.
5. NOSE COVER & TRANSITION ASSEMBLIES ARE NOT INCLUDED IN MODEL NUMBER. ORDER SEPARATELY. TRANSITION ASSEMBLIES ARE ACCESSORY ITEMS.
6. LOCATE REACT M SYSTEM SO THAT THE EDGE OF BACKUP IS 203 [8] FROM THE BARRIER AT 813 [32] ABOVE GRADE.
7. IF BARRIER EXTENDS BEYOND THE BACKUP LEG PROFILE OR BARRIER HEIGHT IS OVER 813 [32], TRIM BARRIER SIDE AND/OR TOP AT 1:4 TAPER TO PREVENT VEHICLE CONTACT.

BIDIRECTIONAL

KEY

1 REACT M	6
2 REFLECTOR	7
3 REFLECTIVE NOSE	8
4 TRANSITION	9
5	10

REFERENCES

SERIAL NO. _____
SALES ORDER _____
EH PROJECT _____
DESIGN SPEED SEE TABLE
NOSE TYPE _____
NO. OF UNITS _____

REFLECTIVE NOSE ASSY	617967
REFLECTOR ASSY	613705
CONCRETE PAD	627696
PULLOUT BRACKET ASSY	627838
TRANSITION ASSY	627577
ANCHOR PLATE ASSY (OPTIONAL)	627576

DRAWN	R. VENZON	DATE	1/18/2021
CHECKED	B. SINDORF	DATE	1/27/2021
UNLESS OTHERWISE NOTED: DIMENSIONS ARE IN MILLIMETERS [INCH] DIMENSIONS ACCORDING TO ASME Y14.5M-1994 AND THP-SE-003 UNLESS OTHERWISE SPECIFIED			

MODEL NO: SEE TABLE
FILE: RM62B036B-T8SLR.idw
DO NOT SCALE DRAWING

REACT™ M SYSTEM
TL-3 W/ SELF-CONTAINED B/U, 8" OFFSET (L/R)
SAFETY SHAPE OR SINGLE SLOPE BARRIER

TRINITY HIGHWAY

DRAWING: RM62B036B-T8SLR | REV: - | SHEET: 1 of 1

THP-FE-048 Rev H 9/21/2020

© 2021 Trinity Highway Products, LLC. All rights reserved.

REACT™ M RM62B036B-T8SLR

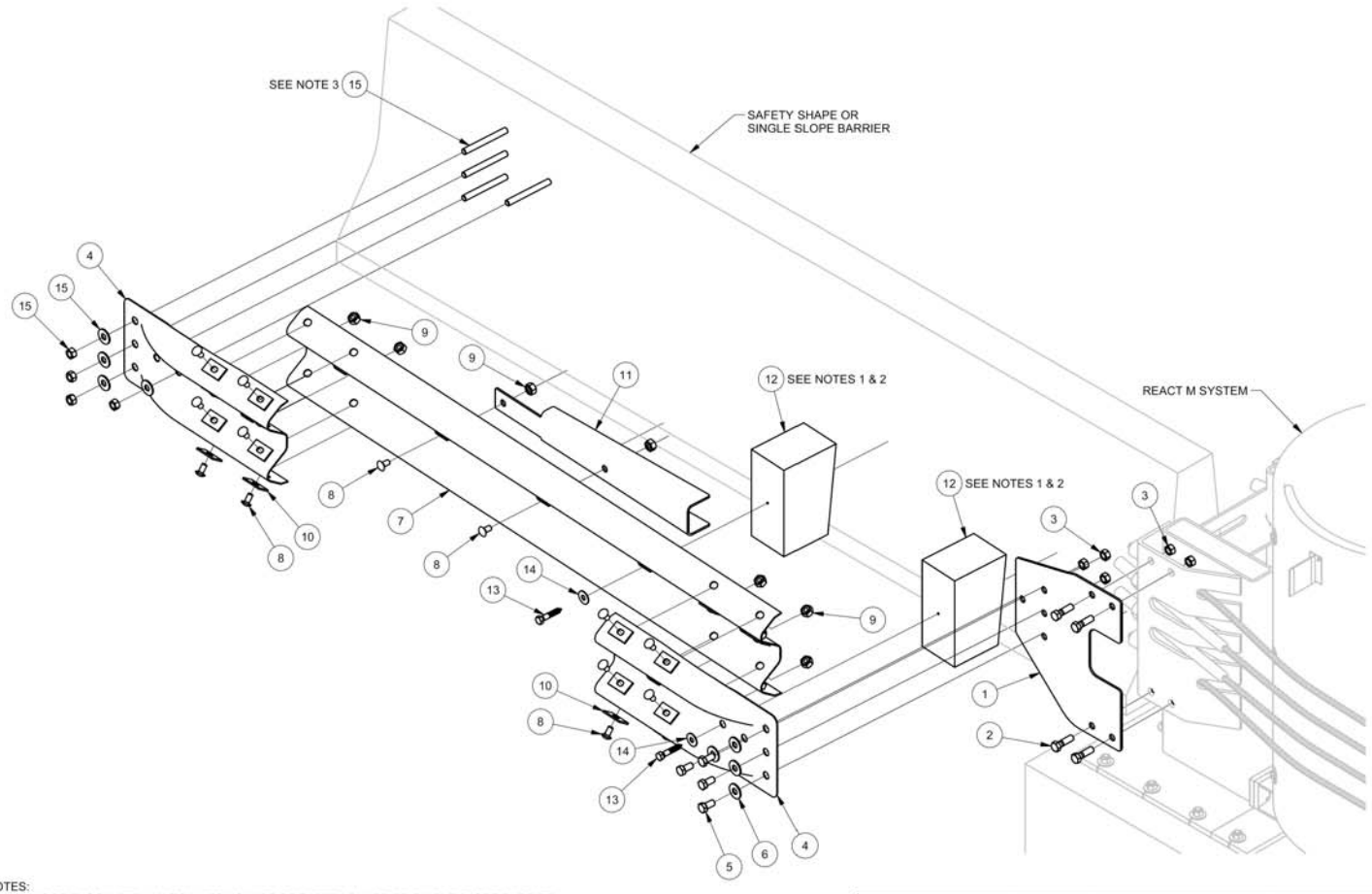

COMPONENTS	
ITEM	DESCRIPTION
1	ADAPTER,TRANS,WBEAM,REACT M
2	BOLT,HX,3/4X2 1/2,G8,G
3	3/4" HVY HEX NUT A563 DH
4	10/END SHOE/EXTRA HOLE
5	BOLT,HX,3/4X1 1/2,G5,G
6	WASHER,FLAT,3/4X2,HVY,G
7	RAIL,TRANSITION,W-BEAM,STIFF
8	5/8"X1.25" GR BOLT
9	NUT,HX,5/8,G,RAIL
10	WASHER, GUARDRAIL,G
11	SUPPORT,TRANSITION,REACT M
12	WD BLK 6X8.5X13 TPRD
13	5/8"X3" LAG BOLT A307
14	WASHER,FLAT,5/8 X 1 3/4, G
15	ANCHOR KIT,HILTI,330ml,3/4X7,(4)

TABLE	
ASSY NO.	APPLICATION
627571	SAFETY SHAPE OR SINGLE SLOPE

NOTES:
1. CUT WOOD BLOCK (ITEM 12) TO MATCH SHAPE OF SAFETY SHAPE OR SINGLE SLOPE BARRIER.
2. DRILL PILOT HOLE IN WOOD BLOCK (ITEM 12) FOR LAG BOLT (ITEM 13).
3. USE TRANSITION END SHOE (ITEM 4) AS TEMPLATE FOR DRILLING. RECOMMENDED HOLE DEPTH: 149 [5 7/8]. FINAL TORQUE TO BE 135Nm [100 ft-lb].
4. LEFT SIDE OF ROAD APPLICATION SHOWN. ASSEMBLY MAY BE USED ON EITHER OR BOTH SIDES FOR LEFT, RIGHT, MEDIAN OR GORE APPLICATIONS.
5. THIS TRANSITION ASSEMBLY MAY BE USED FOR SAFETY SHAPE BARRIER (NEW JERSEY OR F-SHAPE) OR SINGLE SLOPE BARRIER.

DRAWN	DATE	UNLESS OTHERWISE SPECIFIED, DIMENSIONS ARE IN MILLIMETERS [INCH] AND ACCORDING TO ASME Y14.5M-1994 AND THP-SE-003	REACT™ M
R. VENZON	1/15/2021		TRANSITION ASSY,SAFETY SHAPE OR SINGLE SLOPE
CHECKED	DATE	DO NOT SCALE DRAWING	
B. SINDORF	1/27/2021		DRAWING 627577 REV - SHEET 1 of 2

TRINITY HIGHWAY

© 2021 Trinity Highway Products, LLC. All rights reserved.

Safety Shape Transition Assembly 627577

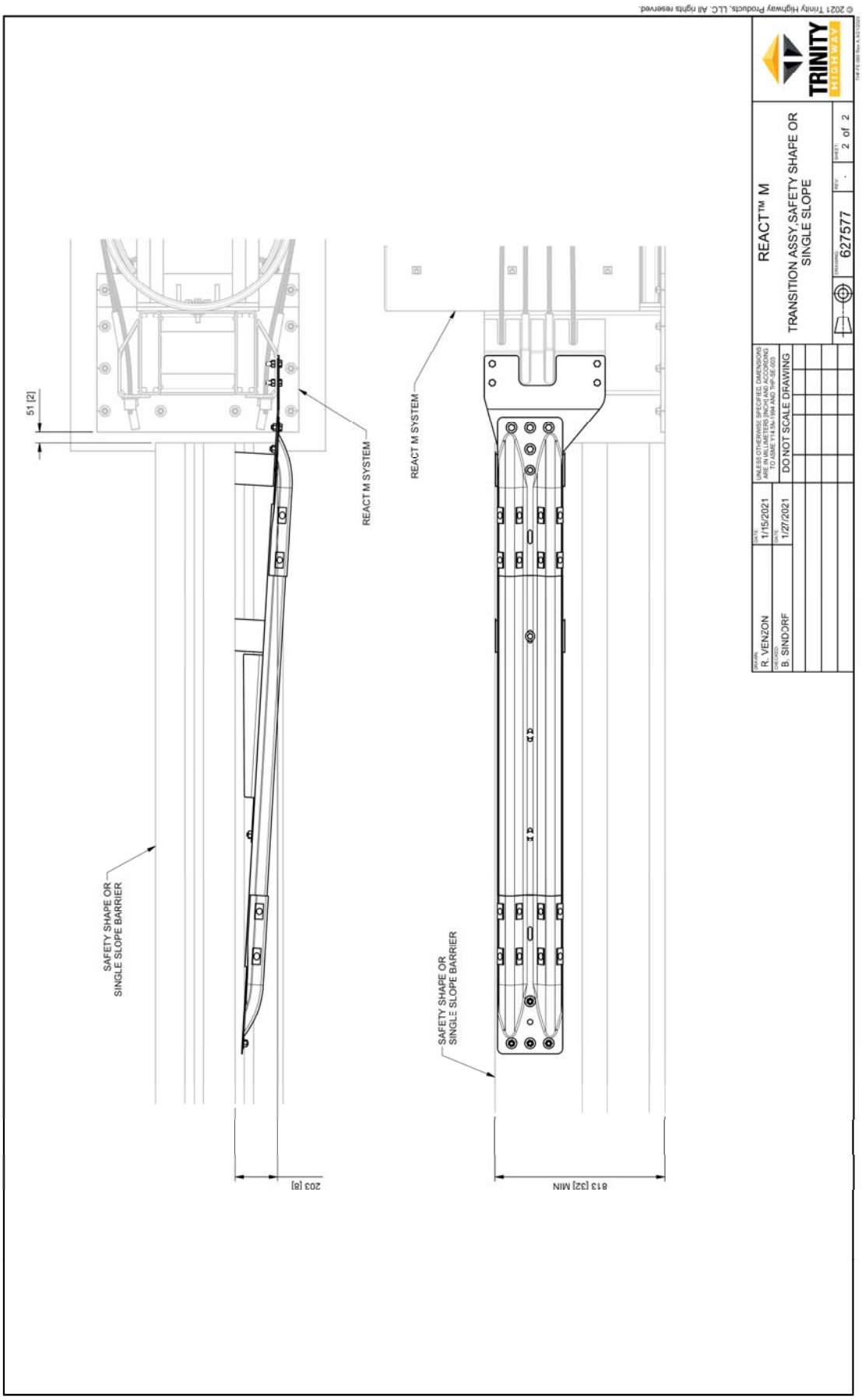
© 2021 Trinity Highway Products, LLC. All rights reserved.
51 [2]
REACT M SYSTEM
SAFETY SHAPE OR SINGLE SLOPE BARRIER
203 [8]
REACT M SYSTEM
SAFETY SHAPE OR SINGLE SLOPE BARRIER
813 [32] MIN
REACT™ M
TRANSITION ASSY,SAFETY SHAPE OR SINGLE SLOPE
627577
2 of 2
TRINITY HIGHWAY
R. VENZON
1/15/2021
B. SINDORF
1/27/2021
DO NOT SCALE DRAWING

TABLE		
ASSEMBLY	BARRIER	SURFACE
627574	NEW JERSEY	CONCRETE
627575	F-SHAPE	CONCRETE

COMPONENTS	
ITEM	DESCRIPTION
1	ANCHOR KIT,HILTI,330ml,3/4X7,(4)
2	ANCHOR PLATE,PCMB
3	ANCHOR KIT,HILTI,330ml,3/4X8 1/2,(4)

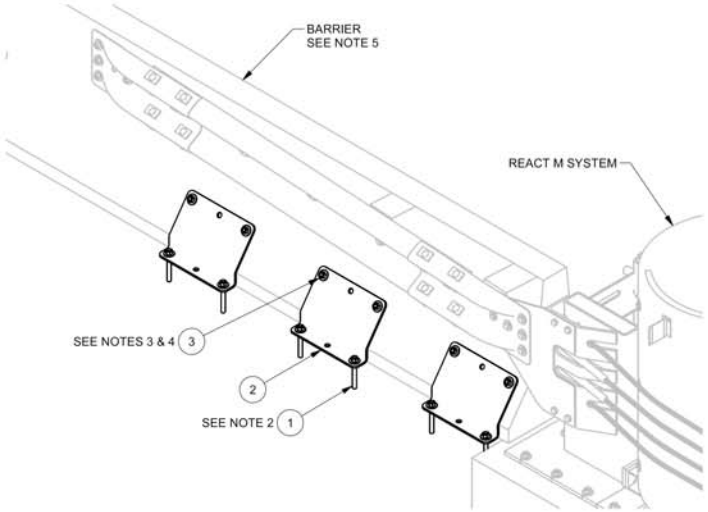

CONCRETE APPLICATION

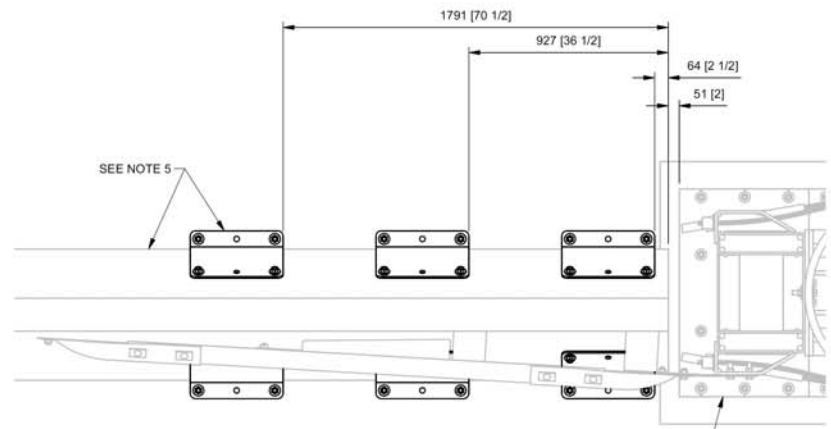

PLAN VIEW
LEFT SIDE SHOWN
RIGHT SIDE OPPOSITE

NOTES:
1. IMPACT FORCES COULD BE TRANSFERRED INTO TERMINAL END OF THE BARRIER. ADEQUATE ANCHORAGE IS REQUIRED FOR PROPER IMPACT PERFORMANCE.
2. USE ANCHOR PLATE AS TEMPLATE FOR DRILLING. RECOMMENDED HOLE DEPTH 146 [5 3/4]. FINAL TORQUE TO BE 135 Nm [100 ft-lb].
3. USE ANCHOR PLATE AS TEMPLATE FOR DRILLING. RECOMMENDED HOLE DEPTH 184 [7 1/4]. FINAL TORQUE TO BE 135 Nm [100 ft-lb].
4. ANCHOR STUD END SHOULD BE FLUSH WITH OUTSIDE SURFACE OF ANCHOR NUT.
5. STATE APPROVED PERMANENT SAFETY SHAPE BARRIER MAY SUBSTITUTE BARRIER AND ANCHOR PLATE ASSEMBLY.

DRAWN: R. VENZON	DATE: 1/18/2021	UNLESS OTHERWISE SPECIFIED, DIMENSIONS ARE IN MILLIMETERS [INCH] AND ACCORDING TO ASME Y14.5M-1994 AND THP-SE-003	ANCHOR PLATE ASSY,SAFETY SHAPE,REACT M
CHECKED: B. SINDORF	DATE: 1/27/2021	DO NOT SCALE DRAWING	DRAWING 627576 REV - SHEET 1 of 1

TRINITY HIGHWAY

© 2021 Trinity Highway Products, LLC. All rights reserved.

Anchor Plate, Safety Shape 627576

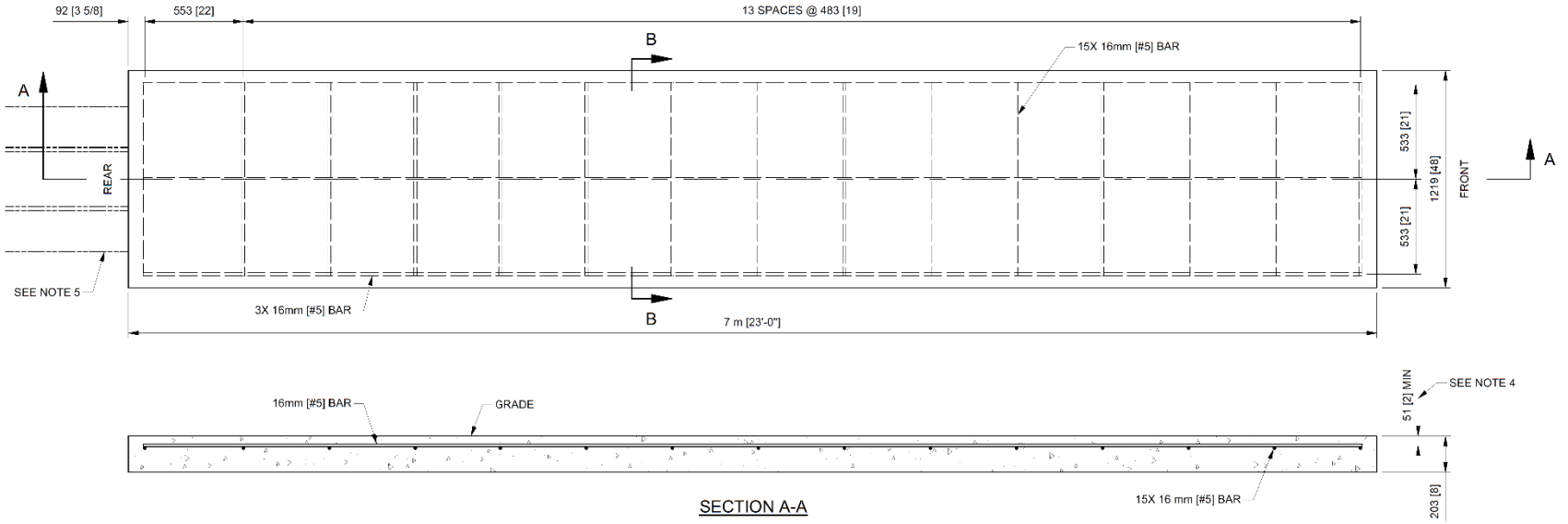

SECTION A-A

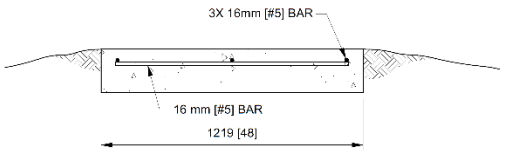

SECTION B-B

NOTES:
1. ALL CONCRETE WORK AND RE-BAR DETAILS SHALL CONFORM TO THE LATEST ACI CODE AND MANUAL.
2. ALL CONCRETE TO BE 203 [8] MINIMUM THICK 28 MPa [4000 PSI] COMPRESSIVE STRENGTH AT 28 DAY TEST.
3. ALL REINFORCING BARS SHALL BE A615 GRADE 60 NEW BILLET STEEL.
4. PROVIDE MIN. 51 [2] CLEAR CONCRETE COVER OVER REINFORCING STEEL.
5. THE PAD DETAILED ON THIS SHEET REQUIRES IT TO BE PLACED AGAINST AND SUPPORTED BY A RIGID BARRIER OR OTHER STRUCTURE. THE SUPPORT STRUCTURE OR BARRIER WILL RESIST PAD AND SYSTEM SLIDE DURING IMPACTS. USE THE BELOW GRADE ANCHOR DETAILED ON SHEET 2 FOR AN INDEPENDENT, SOIL SUPPORTED PAD. THE SYSTEM COULD TRANSFER IMPACT LOADING TO ADJACENT STRUCTURES. PROVIDE ADEQUATE ANCHORAGE.
6. CROSS SLOPE OF PAD SHALL NOT EXCEED 8% AND NOT VARY MORE THAN 2% FROM FRONT TO BACK.
7. THE BELOW GRADE ANCHOR BLOCK, ON SHEET 2, SHOULD BE PLACED AT THE REAR OF THE SYSTEM.

DRAWN: D. Hayes Jr	DATE: 8/12/2020	UNLESS OTHERWISE SPECIFIED, DIMENSIONS ARE IN MILLIMETERS [INCH] AND ACCORD INC TO ASME Y14.5M-1994 AND T-HP-SE-003	REACT™ M SYSTEM
CHECKED: R. Brougher	DATE: 8/21/2020	DO NOT SCALE DRAWING	CAST-IN-PLACE CONCRETE PAD AGAINST A RIGID BARRIER
			DRAWING: 627696 REV: - SHEET: 1 of 2

TRINITY HIGHWAY

© 2020 Trinity Highway Products, LLC. All rights reserved.

Concrete Pad Against Rigid Barrier 627696

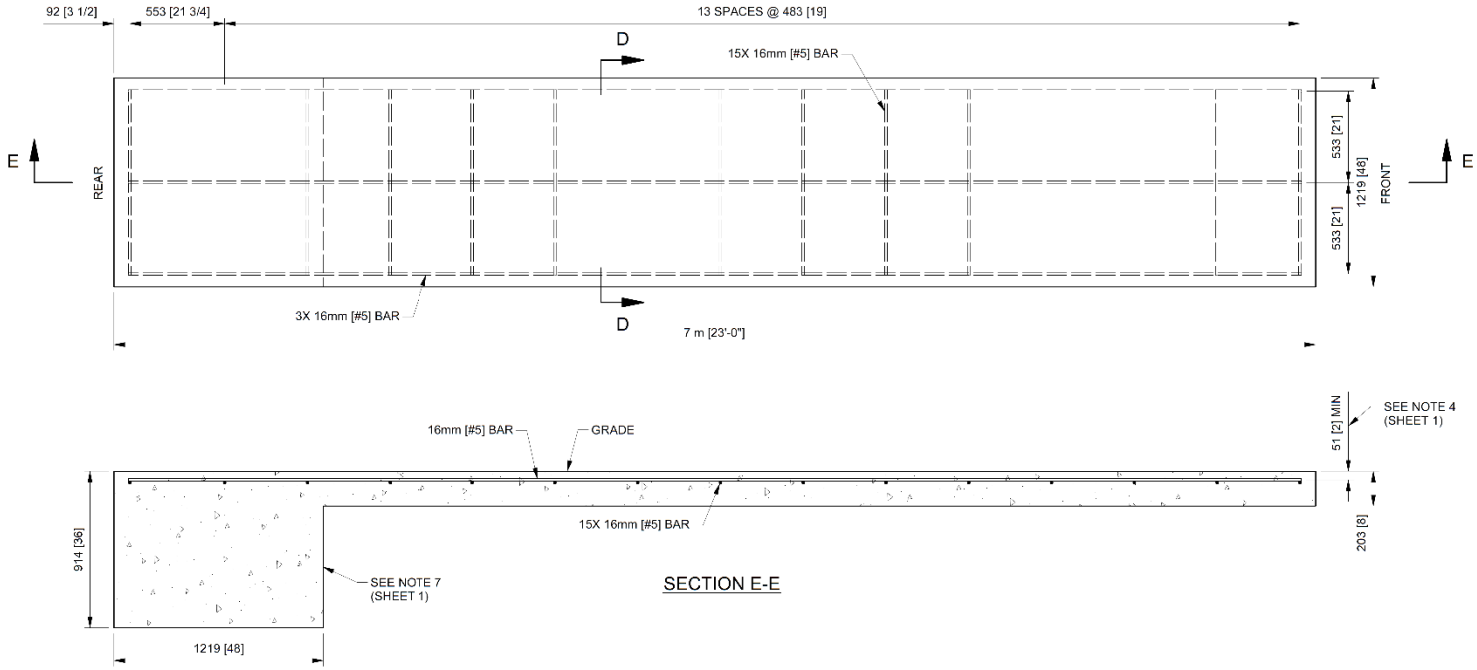

NOTE:
SEE SHEET 1

DRAWN: D. Hayes Jr	DATE: 8/12/2020	UNLESS OTHERWISE SPECIFIED, DIMENSIONS ARE IN MILLIMETERS (INCH) AND ACCORDING TO ASME Y14.5M-1994 AND THP-SE-003	REACT™ M SYSTEM
CHECKED: R. Brougher	DATE: 8/21/2020	DO NOT SCALE DRAWING	CAST-IN-PLACE CONCRETE PAD W/ BELOW GRADE ANCHOR BLOCK
			DRAWING: 627696 REV: - SHEET: 2 of 2

TRINITY HIGHWAY

THP RE BID Rev - 8/19/2020

© 2020 Trinity Highway Products, LLC. All rights reserved.

Concrete Pad w/Below Grade Anchor Block 627696

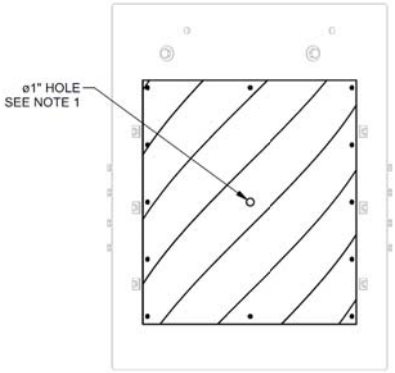

UNIVERSAL
ASSEMBLY NO. 617968B
(SEE NOTE 4)

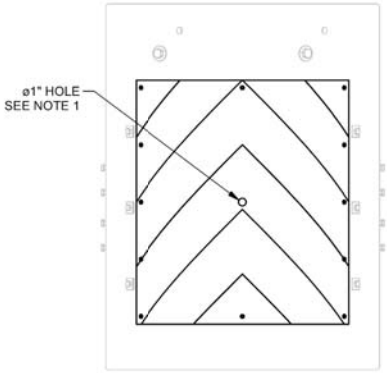

GORE
ASSEMBLY NO. 617967B

PARTS LIST			
ITEM	STOCK NO.	DESCRIPTION	QTY.
1	SEE TABLE	NOSE COVER,*,32X32,TL-3,REACT,**	1
2	116888G	SCREW,HWH,1/4X1 1/4,SELF DRILL/TAP,P	12

* GORE / UNIV (APPLICATION TYPE)
** TAPE COLOR

Table		
ASSEMBLY NO.	DESCRIPTION	ITEM 1
617967B	NOSE COVER ASSY,GORE,TL-3,REACT,Y	617965B
617968B	NOSE COVER ASSY,UNIV,TL-3,REACT,Y	617966B
618068B	NOSE COVER ASSY,GORE,TL-3,REACT,O	618066B
618069B	NOSE COVER ASSY,UNIV,TL-3,REACT,O	618067B

APPLICATION DETAIL

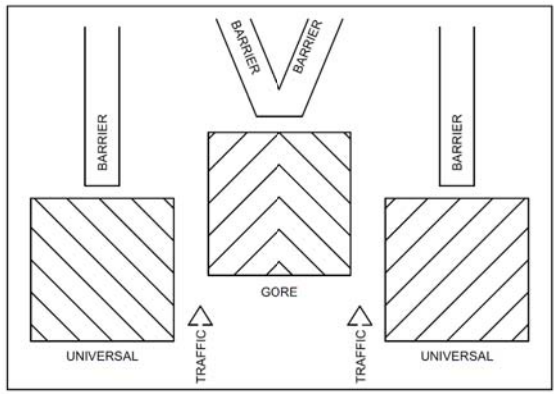

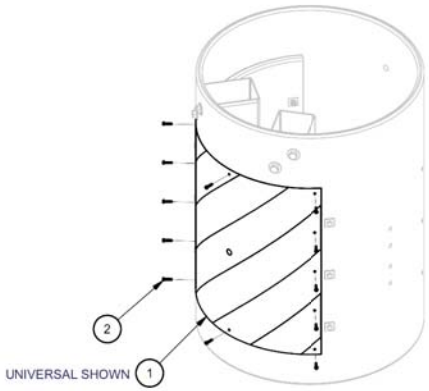

NOTES:
1. LOCATE ø1" HOLE IN NOSE COVER OVER ø1" HOLE IN CYLINDER, THEN SECURE WITH SCREWS (ITEM 2).
2. SCREW ITEM 2 INTO CYLINDER, PUNCHING THRU REFLECTIVE TAPE AND INTO EXSISTING HOLES IN NOSE COVER, UNTIL HEAD OF FASTENER (ITEM 2) IS FLUSH. DO NOT CONTINUE TO SPIN FASTENER.
3. NOSE COVER NOT INCLUDED IN MODEL AND MUST BE ORDERED SEPARATELY. DESIRED NOSE MUST BE SPECIFIED WHEN ORDERING. REVIEW APPLICATION DETAIL TO VERIFY TYPE.
4. AS SHOWN, APPROACH TRAFFIC PASSES TO LEFT OF SYSTEM NOSE. HAZARD/OBJECT IS ON RIGHT SIDE OF TRAVELWAY. FOR APPROACH TRAFFIC ON RIGHT OF SYSTEM NOSE & HAZARD/OBJECT ON THE LEFT OF TRAVELWAY, ROTATE 90°.

DRAWN: D. Hayes Jr	DATE: 12/21/2010
DESIGNED: A. Cox	DATE: 11/12/2010
CHECKED: J. Espinoza	DATE: 2/22/2011
APPROVED: A. Cox	DATE:
FILE: 617967.idw	

ASSEMBLY NO. SEE TABLE

ENERGY ABSORPTION SYSTEMS, INC.
ENGINEERING AND RESEARCH DEPARTMENT

REACT SYSTEM

NOSE COVER ASSEMBLY,TL-3,REACT

SCALE	DRAWING	SHEET	REV
NTS	617967	1 of 1	A

FM0037 Rev -, 7/22/10

Nose Cover Assembly 617967

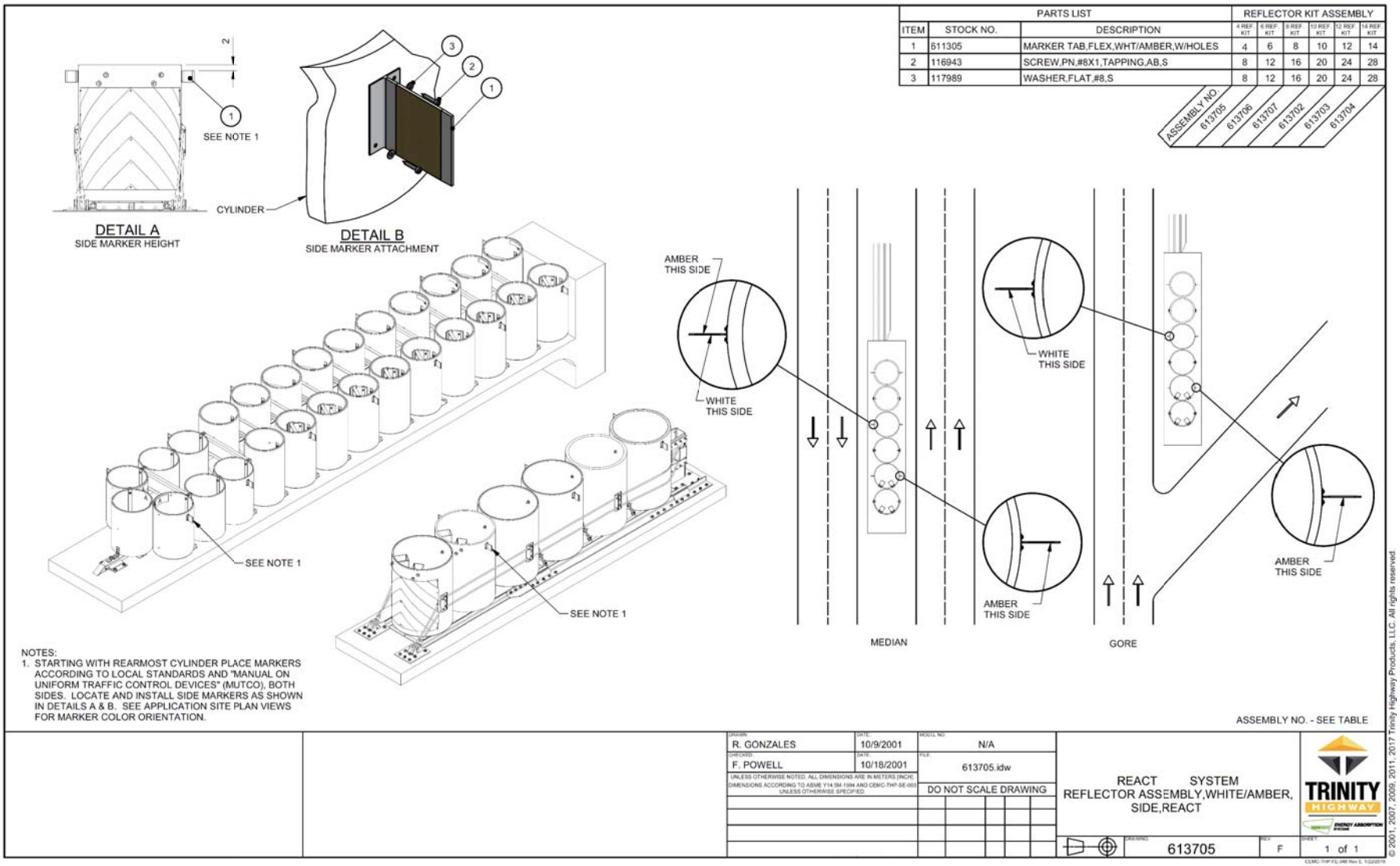

Side Reflector Assembly 613705

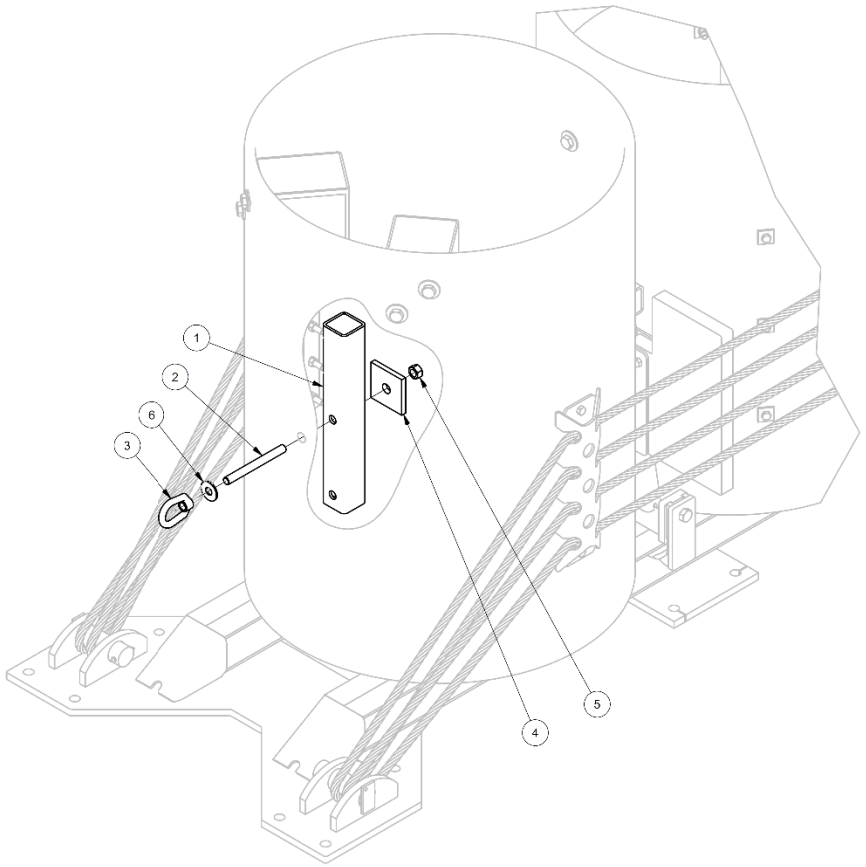

COMPONENTS	
ITEM	DESCRIPTION
1	TUBE,BACKING,PULLOUT,REACT
2	STUD,3/4X7 1/2,G5,G
3	NUT,EYE,3/4,G
4	FTB ST 1/2X4X4,W/HOLE,(REACT)
5	3/4" HVY HEX NUT A563 DH
6	WASHER,FLAT,3/4X2,HVY,G

TABLE	
ASSY NO.	DESCRIPTION
612816	PULLOUT ASSEMBLY (REACT)

DRAWN: D. Hayes Jr	DATE: 11/16/2020	UNLESS OTHERWISE SPECIFIED, DIMENSIONS ARE IN MILLIMETERS [INCH] AND ACCORDING TO ASME Y14.5M-1994 AND THP-SE-003	REACT™
CHECKED: A. Van Brocklin	DATE: 11/24/2020	DO NOT SCALE DRAWING	PULLOUT BRACKET ASSEMBLY
			DRAWING: 627838 REV: - SHEET: 1 of 1

TRINITY HIGHWAY

THP-FE-060 Rev A, 3/21/2023

© 2020 Trinity Highway Products, LLC. All rights reserved.

Pullout Bracket Assembly 627838

Notes:

Notes:

Notes:

TRINITY
HIGHWAY

Ahead of the Curve®

For more complete information on Trinity Highway products and services, visit us on the web at www.trinityhighway.com. Materials and specifications are subject to change without notice. Please contact Trinity Highway to confirm that you are referring to the most current instructions.